SIEMENS

SAX.., SAY..

SAV..

SAL..

SAX61../MO,
SAY61../MO

SAV61../MO

Acvatix™
Actuators SAX.., SAY.., SAV.., SAL.. for valves
Basic Documentation

CE1P4040en
2020-01-30

Smart Infrastructure

Siemens Switzerland Ltd
Smart Infrastructure
Global Headquarters
Theilerstrasse 1a
6300 Zug
Switzerland
Tel. +41 58-724 24 24
www.siemens.com/sbt

© Siemens Switzerland Ltd, 2010
Subject to change

Contents

1 About this documentation ... 5

1.1 Navigation / Quick access ... 5

1.2 Revision history ... 6

1.3 Reference documents ... 7

1.4 Before you start ... 7
1.4.1 Trademarks ... 7
1.4.2 Copyright ... 7
1.4.3 Quality assurance ... 8
1.4.4 Document use / request to the reader ... 8

1.5 Scope of this documentation ... 8

2 Engineering ... 9

2.1 Product description ... 9

2.2 Use ... 10

2.3 Type summary ... 10
2.3.1 Stroke actuators ... 10
2.3.2 Stroke actuators – combi valves ... 11
2.3.3 Rotary actuators ... 11

2.4 Ordering ... 12

2.5 Equipment combinations ... 14
2.5.1 Stroke actuators − 3-port valves ... 14
2.5.2 Stroke actuators − 2-port valves ... 16
2.5.3 Stroke Acutuators – combi valves ... 18
2.5.4 Rotary actuators – slipper and butterfly valves ... 18

2.6 Accessories ... 19
2.6.1 Electrical accessories ... 19
2.6.2 Mechanical accessories ... 20

2.7 Product replacements ... 20
2.7.1 Stroke actuators SQX.. to SAX ... 20
2.7.2 Rotary actuators SQL.. to SAL.. ... 21
2.7.3 Electrical accessories ... 21

2.8 Spare parts ... 22

2.9 Sizing ... 23
2.9.1 Parallel operation of actuators ... 23
2.9.2 Permissible cable lengths and wire cross-sectional areas ... 23

2.10 Warranty ... 24

3 Handling ... 25

3.1 Mounting and installation ... 25
3.1.1 Mounting positions ... 25
3.1.2 Fitting stroke actuators to seat valves VVF.. / VXF.. or VVG.. / VXG ... 25
3.1.3 Avoid missalignement on V_G41 valves with fittings ... 26
3.1.4 Fitting rotary actuators to butterfly valves VKF41 ... 27
3.1.5 Fitting rotary actuators to slipper valves VBF21 ... 29
3.1.6 Fitting rotary actuators to butterfly valves VKF46 ... 32
3.1.7 Fitting rotary actuators to butterfly valves VKF45 ... 33
3.1.8 Fitting accessories ... 35
3.1.9 Wiring (installation) ... 41

3.2 Commissioning and operation ... 43
3.2.1 Function check and Calibration ... 43
3.2.2 Commissioning Modbus RTU ... 46
3.2.3 Maintenance ... 49

3.2.4 Disposal 49

4 Functions and control 50

4.1 3-position control 50
4.1.1 Combination with RVD.. controller for direct domestic hot water distribution by heat exchanger 52

4.2 Modulating control 53

4.3 Function module AZX61.1 54
4.3.1 Sequence control (signal adaptation) 54
4.3.2 Changeover of acting direction 55

4.4 Positioning signal and flow characteristic selection 56

4.5 Acting direction and flow characteristic 57

4.6 Position Feedback U 57

4.7 Position control with ClosedPosition-Synchronization 58
4.7.1 ClosedPosition-Synchronization 58

4.8 Calibration 59

4.9 Signal priorities 60

4.10 Detection of valve seat 60

4.11 Detection of foreign bodies 61

4.12 Forced control Z 62

4.13 Communicating actuators Modbus RTU 62
4.13.1 Detection of valve seat 62
4.13.2 Detection of foreign bodies 63
4.13.3 Calibration 63
4.13.4 Manual adjustment 64
4.13.5 Modbus Registers 64
4.13.6 Function description 66

4.14 Technical and mechanical design 68
4.14.1 Transmission of power 68
4.14.2 Coupling 69
4.14.3 Manual adjuster 69
4.14.4 Indicators 70
4.14.5 Electrical accessories 71
4.14.6 Mechanical accessories 72

5 Technical data 73

6 Connection diagrams and dimensions 76

6.1 Internal diagrams 76

6.2 Connection terminals 77
6.2.1 Actuators 77
6.2.2 Electrical accessories 77

6.3 Connection diagrams 78

6.4 Dimensions 80
6.4.1 Stroke actuators 80
[1] SAX..U: 1.850 kg 80
6.4.2 External Modbus converter 81
6.4.3 Rotary actuators 82

7 Revision numbers 83

8 Glossary 84

8.1 Symbols 84

8.2 Terms 84

1 About this documentation

1.1 Navigation / Quick access

Information about a specific actuator is provided throughout the document. The structure of chapters 2 to 4 is as follows:

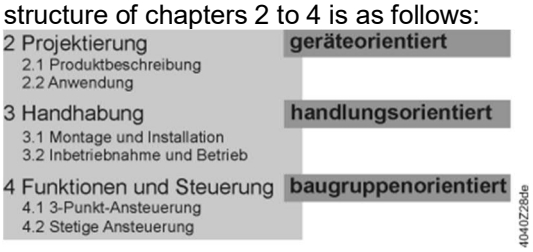

Quick access to important information including reference to pages:

Product no.	2 Engineering		3 Handling		4 Function and control		
	Equipment combinations	Accessories	Calibration	Accessories (mounting)	Control	Calibration	Accessories
SAX31.00	Page 14 - 18	Page 19	-	Page 35-41	Page 50-51	-	Page 71 - 72
SAX31.03							
SAX61.03 1)			Page 43		Page 53	Page 59	
SAX61.03U 1)							
SAX61.03/MO 1)						Page 63	
SAX81.00 1)			-		Page 50-51	-	
SAX81.03 1)							
SAX81.03U 1)							
SAX31P03							
SAX61P03 1)			Page 43		Page 53	Page 59	
SAX61P03/MO 1)						Page 63	
SAX81P03 1)			-		Page 50-51	-	
SAY31P03	Page 18	Page 19	Page 43	Page 35-41	Page 50-51	Page 59	Page 71 - 72
SAY61P03 1)							
SAY61.03U 1)							
SAY61P03/MO 1)						Page 63	
SAY81P03 1)						Page 59	
SAY81.03U 1)							
SAV31.00	Page 14 - 18	Page 19	-	Page 35-41	Page 50-51	-	Page 71 - 72
SAV61.00 1)			Seite 43		Page 53	Page 59	
SAV61.00U 1)							
SAV61.00/MO 1)						Page 63	
SAV81.00 1)			-		Page 50-51	-	
SAV81.00U 1)							
SAV31P00							
SAV61P00 1)			Page 43		Page 53	Page 59	
SAV61P00/MO 1)						Page 63	
SAV81P00 1)			-		Page 50-51	-	

SAL31.00T10	Page 18	Page 19	-	Page 35-41	Page 50-51	-	Page 71 - 72
SAL31.00T20							
SAL31.00T40							
SAL31.03T10							
SAL61.00T10 [1)]			Page 43		Page 53	Page 59	
SAL61.00T20 [1)]							
SAL61.00T40 [1)]							
SAL61.03T10 [1)]							
SAL81.00T10 [1)]			-		Page 50-51	-	
SAL81.00T20 [1)]							
SAL81.00T40 [1)]							
SAL81.03T10 [1)]							

[1)] These types of actuator are UL-listed versions

Note

Glossary and Index are arranged at the end of the document.

1.2 Revision history

Revision	Date	Changes	Chapter
First edition	16.07.2010	-	-
2.0	2010-12-12	Rotary actuator SAL..T10 integrated	
		Mounting and installation of butterfly valves and slipper valves corrected and expanded	3.1
		New chapter „Position feedback U“	4.6
		Technical data corrected	5
2.1	2011-09-14	V..F53.. valves added	2.5
		SAL.T20 rotary actuators added	1.1, 1.2, 2.3, 2.4, 2.5, 2.6, 3, 3.1, 4.12, 5, 7
3	2012-09-12	Corrections regarding SAX..Series „G“ “ VVF53.50-40K valve added	2.4, 4.1, 4.7, 4.13, 5, 6.4
3.1	2013-12-17	SAL..T40 is added	…
3.2	2014-11-20	Supplemented with new valves V..F22, V..F32.., V..F42..	1.1, 1.3, 2.1, 2.2, 2.3, 2.4, 2.5, 2.6, 3.1, 4.1, 4.3, 4.4 4.13, 5, 6.1, 6.4, 7
		Supplemented with actuators SAV..	1.1, 1.3, 2.1, 2.2, 2.3, 2.4, 2.5, 2.6, 2.8, 4.1, 4.4, 4.7, 4.13, 5, 6.4, 7
3.3	2015-10-26	Supplemented with actuators SAY..P..	Various
3.4	2016-10-04	Actualization of headings with SAY.., added SAY.. to information on content and accessories	Various
3.5	2017-05-26	New: Communicating actuators (SAX61.03/MO)	Whole document
3.6	2020-01-30	New: Communicating actuators SAX61P03/MO, SAY61P03/MO, SAV61../MO New accessory: ASK32N	Various
		Update to communicating actuators (parameters and functions)	4.13

1.3 Reference documents

Type of document		SAX..	SAV..	SAY..	SAL..
Data Sheet		N4501, N4509, Q4501	N4503, N4510	A6V10628469	N4502
Data Sheet Modbus communication profiles		A6V101037195	-	-	-
Mounting Instructions		-	-	-	ASK31N: M4502.1 ASK32N: A6V11558817 ASK33N: M4502.2 ASK35N: M4502.3
		ASC..: M4040.1 ASZ7.5: M4040.2 AZX61..: M4040.3 ASK39..: M4040.3 ASZ6.6: M4501			-
Mounting Instructions S..6../MO and G..161../MO		A5W00027551	-	-	-
CE Declaration of Conformity	AC 230 V	T4501X1	T4503X1	A5W00000333	T4502X1
	AC/DC 24 V	T4501X2	T4503X2	A5W00000333	T4502X2
Environmental Declaration		E4501	E4503	7173310559B	E4502
Environmental Declaration, external Modbus converter		A6V101083254	-	-	-
Modbus over serial line - Specification and Implementation Guide		www.modbus.org			-

1.4 Before you start

1.4.1 Trademarks

The table below lists the third-party trademarks used in this document and their legal owners. The use of trademarks is subject to international and domestic provisions of the law.

Trademarks	Legal owner
Acvatix™	Siemens Switzerland Ltd

All product names listed in the table are registered (®) or not registered (™) trademarks of the owner listed in the table. We forgo the labeling (e.g. using the symbols ® and ™) of trademarks for the purposes of legibility based on the reference in this section.

1.4.2 Copyright

This document may be duplicated and distributed only with the express permission of Siemens, and may be passed on only to authorized persons or companies with the required technical knowledge.

1.4.3 Quality assurance

These documents were prepared with great care.

- The contents of all documents are checked at regular intervals
- All necessary corrections are included in subsequent versions
- Anpassungen bzw. Documents are automatically amended as a consequence of modifications and corrections to the products described

Please make sure that you are aware of the latest document revision date.
If you find lack of clarity while using this document, or if you have any criticisms or suggestions, please contact the product manager in your nearest branch office.
The addresses of the Siemens regional companies are available at www.siemens.com/acvatix.

1.4.4 Document use / request to the reader

Before using our products, it is important that you read the documents supplied with or ordered at the same time as the products (equipment, applications, tools etc.) carefully and in full.
We assume that persons using our products and documents are authorized and trained appropriately and have the technical knowledge required to use our products as intended.
More information on the products and applications is available:

- On the intranet (Siemens employees only) at https://workspace.sbt.siemens.com/content/00001123/default.aspx.
- From the Siemens branch office near you www.siemens.com/acvatix or from your system supplier.
- From the support team at headquarters fieldsupport-zug.ch.sbt@siemens.com if there is no local point of contact.

Siemens assumes no liability to the extent allowed under the law for any losses resulting from a failure to comply with the aforementioned points or for the improper compliance of the same.

1.5 Scope of this documentation

This document shall serve as a source of knowledge. In addition to basic information, it provides general technical information about the actuators used in HVAC plants. It is also targeted at engineering staff, HVAC electrical planners, system integrators and service engineers and provides all information required for planning work, correct installation, commissioning and service.

2 Engineering

2.1 Product description

The line of large actuators is comprised of stroke actuators SAX.., SAY.., SAV.. and rotary actuators SAL..

Mechanical design

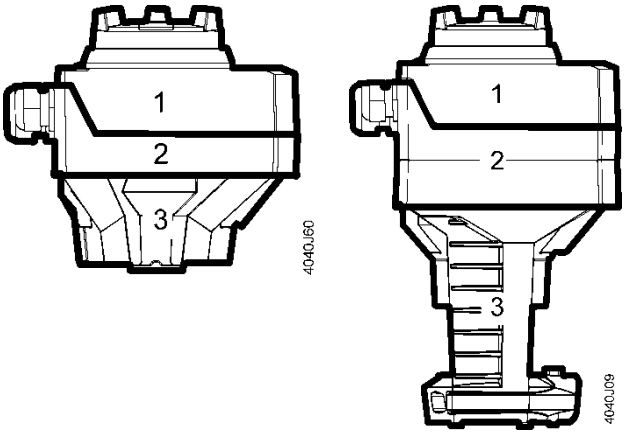

1	User interface and electrical connections
2	Power transmission and preparation
3	Yoke (for assembly of actuator and seat, slipper or butterfly valve)

Components

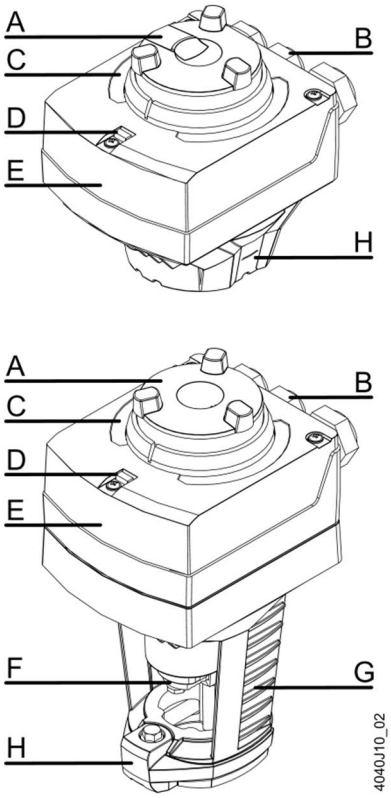

			Page
A	**Manual adjuster** (with slide switch)		69
B	**Cable glands** (M20 / M25)	Wiring (installation)	41
C	**Position indication**		70
D	**Status indication**		70
E	**Housing cover**	Spare parts	22
		Removal / fitting	35
F	**Valve stem coupling**	Coupling	69
G	**Yoke**		
H	**Valve neck coupling**		

Network functions

See Section 3.2.2 Commissioning Modbus RTU

2.2 Use

SAX.., SAV.. For use in connection with Siemens 2-port or 3-port valves with 20/40 mm stroke, as control or shutoff valves for HVAC plants.

SAY.. For the operation of Siemens combi valves of type VPI46.40F9.5Q and VPI46.50F12Q with 15 mm stroke as control valves in ventilation, air conditioning, and district heating systems.

SAL.. For use in connection with Siemens butterfly or slipper valves, as control or shutoff valves for HVAC plants.

Note When using the actuators outdoors, weather shield ASK39.1 must be fitted. SA..61../MO are not suitable for outdoor applications.

2.3 Type summary

2.3.1 Stroke actuators

Product no.	Stock no.	Stroke	Pos. force	Operating voltage	Positioning signal	Spr. ret. time	Pos. time	LED	Manual ad-juster [1]	Extra functions
SAX31.00	S55150-A105	20 mm	800 N	AC 230 V	3-position	-	120 s	-	Press and fix	-
SAX31.03	S55150-A106						30 s			
SAX61.03 **SAX61.03U**	S55150-A100 S55150-A100-A100			AC 24 V /DC 24 V	DC 0…10 V DC 4…20 mA 0…1000 Ω			✓		Position feedback, forced control, change of characteristic
SAX61.03/MO [2]	S55150-A140				Modbus RTU					Position feedback, forced control
SAX81.00	S55150-A102				3-position		120 s	-		-
SAX81.03 **SAX81.03U**	S55150-A103 S55150-A103-A100						30 s			
SAV31.00 [3]	S55150-A112	40 mm	1600 N	AC 230 V	3-position	-	120 s	-	Press and fix	-
SAV61.00 [3] **SAV61.00U** [3]	S55150-A110 S55150-A110-A100			AC 24 V /DC 24 V	DC 0…10 V DC 4…20 mA 0…1000 Ω			✓		Position feedback,forced control, change of characteristic
SAV61.00/MO [2]	S55150-A141				Modbus RTU					
SAV81.00 [3] **SAV81.00U** [3]	S55150-A111 S55150-A111-A100				3-position			-		-

[1] Not designed for continuous operation.

[2] Fixed connection cable 5 x 0.75 mm2

[3] SAV..: This product line of actuators might not be available in all countries. Please talk to your local contact or consult your local internet pages of www.buildingtechnologies.siemens.com.

2.3.2 Stroke actuators – combi valves

Product no.	Stock no.	Stroke	Pos. force	Operating voltage	Positioning signal	Spr. ret. time	Pos. time	LED	Manual adjuster [1]	Extra functions
SAY31P03	S55150-A132	15 mm	500 N	AC 230 V	3-Point	-	30 s	-	Press and fix	-
SAY61P03	S55150-A133			AC 24 V /DC 24 V	DC 0…10 V DC 4…20 mA 0…1000 Ω			✓		Position feedback, forced control, change of characteristic
SAY61.03U	S55150-A135									
SAY61P03/MO	S55150-A145				Modbus RTU					
SAY81P03	S55150-A134				3-Point			-		-
SAY81.03U	S55150-A136									
SAX31P03	S55150-A118	20 mm	500 N	AC 230 V	3-position	-	30 s	-	Press and fix	-
SAX61P03	S55150-A114			AC 24 V /DC 24 V	DC 0…10 V DC 4…20 mA 0…1000 Ω			✓		Position feedback, forced control, change of characteristic
SAX61P03/MO	S55150-A143				Modbus RTU					
SAX81P03	S55150-A116				3-position			-		-
SAV31P00	S55150-A121	40 mm	1100 N	AC 230 V	3-position	-	120 s	-	Press and fix	-
SAV61P00	S55150-A119			AC 24 V /DC 24 V	DC 0…10 V DC 4…20 mA 0…1000 Ω			✓		Position feedback, forced control, change of characteristic
SAV61P00/MO	S55150-A144				Modbus RTU					
SAV81P00	S55150-A120				3-position			-		-

[1] Not designed for continuous operation.

2.3.3 Rotary actuators

Product no.	Stock no.	Angular rotation	Torque	Operating voltage	Positioning signal	Spr. ret. time	Pos. time	LED	Manual adjuster [1]	Extra functions
SAL31.00T10	S55162-A108	90°	10 Nm	AC 230 V	3-position	-	120 s	-	Press and fix	-
SAL31.00T20	S55162-A110		20 Nm							
SAL31.00T40	S55162-A111		40 Nm							
SAL31.03T10	S55162-A109		10 Nm				30 s			
SAL61.00T10	S55162-A100			AC 24 V DC 24 V	DC 0…10 V DC 4…20 mA 0…1000 Ω		120 s	✓		Position feedback, forced control
SAL61.00T20	S55162-A102		20 Nm							
SAL61.00T40	S55162-A103		40 Nm							
SAL61.03T10	S55162-A101		10 Nm				30 s			
SAL81.00T10	S55162-A104				3- position		120 s	-		-
SAL81.00T20	S55162-A106		20 Nm							
SAL81.00T40	S55162-A107		40 Nm							
SAL81.03T10	S55162-A105		10 Nm				30 s			

[1] Not designed for continuous operation.

2.4 Ordering

Example

Product no.	Stock no.	Description	Quantity
SAX81.03	S55150-A103	Actuator	1
ASZ7.5	S55845-Z106	Potentiometer	1

Delivery

Actuators, valves and accessories are supplied in individual packs.

Scope of delivery

Type	Device	Screws	Waveinset
SAX.. SAY..P..	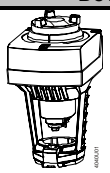	-	-
SAX../MO, SAY../MO	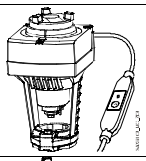	-	-
SAV..	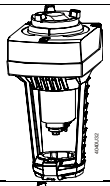	-	-
SAV../MO	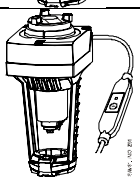	-	-
SAL..T10	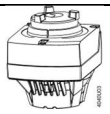	-	-
SAL..T20	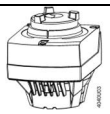	2 pcs. M5 x 20 mm 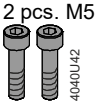	1 pc. 11 mm
SAL..T40	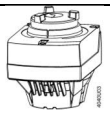	2 pcs. M6 x 20 mm 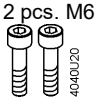	1 pc. 14 mm
ASK31N	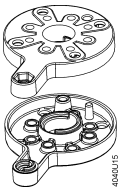	4 pcs. M6 x 16 mm 1 pc. M5 x 20 mm incl. nut 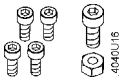	1 pc. 12 mm 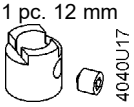 1 pc. 12 mm 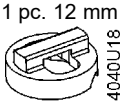
ASK32N	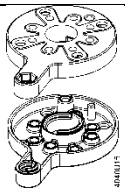	4 pcs. M6 x 16 mm 1 pc. M5 x 20 mm incl. nut 	1 pc. 12mm 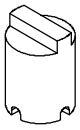

ASK33N	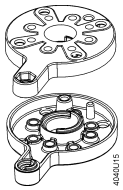	4 pcs. M6 x 16 mm 1 pc. M5 x 20 mm incl. nut 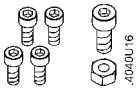	1 pc. 12 mm 1 pc. 12 mm
ASK35N	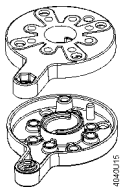	2 pcs. M8 x 50 mm 1 pc. M5 x 20 mm incl. nut 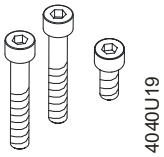	1 pc. 12 mm 1 pc. 16 mm 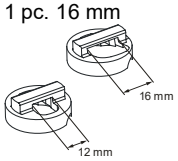

2.5 Equipment combinations

2.5.1 Stroke actuators − 3-port valves

Typical applications	Stroke actuators	Data Sheet	Stroke / Positioning force	20 mm / 800 N		40 mm / 1600 N	
• Heating plants • Ventilation and air conditioning plants • Heat generation • Heat distribution • District heating plants	**SAX..** **SAV..** [8]	N4501 N4503		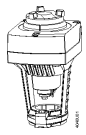		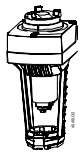	
				SAX..		**SAV..**	
Valves **Basic Doc. (P4030)**				Δp_{max} [5] [kPa] AB⇄A B	Δp_{max} [kPa] A⇄AB B	Δp_{max} [5] [kPa] AB⇄A B	Δp_{max} [kPa] A⇄AB B
Valves **Data Sheet**	**Valve type**	**DN**	k_{vs} [m³/h]				
PN6 N4410	**VXF21.22...25** [1) 7)]	25	1.9 / 3 / 5 / 7.5	100	300	-	-
	VXF21.25.. [2) 7)]		2.5 / 4 / 6.3 / 10				
	VXF21.39-40 [7)]	40	12 / 19				
	VXF21.40-.. [2) 7)]		16 / 25				
	VXF21.50 [7)]	50	31				
	VXF21.50-40 [7)]		40				
	VXF21.65 [7)]	65	49	60	175		
	VXF21.65-63 [7)]		63				
	VXF21.80-78 [7)]	80	78	40	100		
	VXF21.80-100 [7)]		100				
	VXF21.90 [9)]	100	124	-	-		
-10…130 °C [4)]	**VXF21.100-160** [9)]		160				
PN6 N4401	**VXF22.25-..** [2)]	25	2.5 / 4 / 6.3 / 10	100	300	-	-
	VXF22.40-.. [2)]	40	16 / 25			100	300
	VXF22.50-40	50	40				
	VXF22.65-63	65	63	50	150		
	VXF22.80-100	80	100		75	50	225
-10…130 °C	**VXF22.100-160**	100	160	-	-		125
PN10 N4420	**VXF31.15-..** [2) 7)]	15	2.5 / 4	100	300	-	-
	VXF31.24...25 [1) 7)]	25	5 / 7,5				
	VXF31.25-.. [2) 7)]		6.3 / 10				
	VXF31.39...40 [1) 7)]	40	12 / 19				
	VXF31.40-.. [2) 7)]		16 / 25				
	VXF31.50 [7)]	50	31				
	VXF31.50-40 [7)]		40				
	VXF31.65 [7)]	65	49	60	175		
	VXF31.65-63 [7)]		63				
	VXF31.80 [7)]	80	78	40	100		
-10…130 °C [4)]	**VXF31.80-100** [7)]		100				
PN 10 N4402	**VXF32.15-..** [2)]	15	1.6 / 2.5	100	400	-	-
	VXF32.25-.. [2)]	25	6.3 / 10				
	VXF32.40-.. [2)]	40	16 / 25			100	400
	VXF32.50-40	50	40		300		
	VXF32.65-63	65	63	50	150		
	VXF32.80-100	80	100		75	50	225
	VXF32.100-160	100	160	-	-		125
	VXF32.125-250	125	250				90
-10…130 °C [4)]	**VXF32.150-400**	150	400				60
PN16 N4430	**VXF40.15-..** [2) 7)]	15	1.9 / 2.5 / 3 / 4	100	300	-	-
	VXF40.25-.. [2) 7)]	20	5 / 6.3 / 7.5 / 10				
	VXF40.40-.. [2) 7)]	40	12 / 16 / 19 / 25				
	VXF40.50-.. [2) 7)]	50	31 / 40				
	VXF40.65-.. [2) 7)]	65	49 / 63	60	175		
-10…130 °C [4)]	**VXF40.80-..** [2) 7)]	80	78 / 100	40	100		
PN16 N4440	**VXF41.14...15** [1) 7)]	15	1.9 / 3	200	800	-	-
	VXF41.24...25 [1) 7)]	25	5 / 7.5				
	VXF41.39...40 [1) 7)]	40	12 / 19	150	500		
-10…130 °C [4)]	**VXF41.49...50** [1) 7)]	50	19 / 31	100	350		

Typical applications	Stroke actuators	Data Sheet	Stroke / Positioning force	20 mm / 800 N		40 mm / 1600 N	
• Heating plants • Ventilation and air conditioning plants • Heat generation • Heat distribution • District heating plants	**SAX..** **SAV..** [8]	N4501 N4503		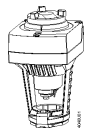		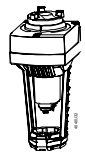	
				SAX..		**SAV..**	
Valves **Basic Doc. (P4030)**							
Valves **Data Sheet**	**Valve type**	**DN**	**k_{vs}** [m³/h]	**Δp_{max}** [5] [kPa] AB⇄A B	**Δp_{max}** [kPa] A⇄AB B	**Δp_{max}** [5] [kPa] AB⇄A B	**Δp_{max}** [kPa] A⇄AB B
PN16 N4403	**VXF42.15-..** [2]	15	1.6 / 2.5 / 4	100	400	-	-
	VXF42.20-6.3	20	6.3				
	VXF42.25-.. [2]	25	6.3 / 10				
	VXF42.40-.. [2]	40	16 / 25			100	400
	VXF42.50-.. [2]	50	31.5 / 40		300		
	VXF42.65-.. [2]	65	50 / 63	50	150		
	VXF42.80-.. [2]	80	80 / 100		75	50	225
	VXF42.100-.. [2]	100	125 / 160	-	-		125
	VXF42.125-.. [2]	125	200 / 250				90
-10…130 °C [4]	**VXF42.150-..** [2]	150	315 / 400				60
PN16 N4404	**VXF43.65-63**	65	63	-	-	100	400
	VXF43.80-100	80	100			50	225
	VXF43.100-160	100	160				125
	VXF43.125-250	125	250				90
-20…130 °C [4]	**VXF43.150-400**	150	400				60
PN25/16 [6] N4405	**VXF53.15-..** [2]	15	1.6 / 2,5 / 4	200	1200	-	-
	VXF53.20-6.3	20	6.3				
	VXF53.25-.. [2]	25	6.3 / 10				
	VXF53.32-16	32	16		750		
	VXF53.40-.. [2]	40	16 / 25		500	200	1150
	VXF53.50-40	50	40	100	300		700
PN25 [6]	**VXF53.65-63**	65	63	-	-	100	400
	VXF53.80-100	80	100			50	225
	VXF53.100-160	100	160				125
	VXF53.125-250	125	250				90
-20…130 °C [4]	**VXF53.150-400**	150	400				75
PN16 N4463	- **VXG41.1301** [3]	15	1.6	-	800	-	-
	- **VXG41.1401** [3]		2.5				
	VXG41.15 **VXG41.1501** [3]		4				
	VXG41.20 **VXG41.2001** [3]	20	6.3				
	VXG41.25 **VXG41.2501** [3]	25	10				
	VXG41.32 **VXG41.3201** [3]	32	16				
	VXG41.40 **VXG41.4001** [3]	40	25		525		
-25…130 °C [4]	**VXG41.50** **VXG41.5001** [3]	50	40		300		

1) Insert running number instead of k_{vs} value
2) .. = insert k_{vs} value
3) With tight bypass; VXG41.1301 and VXG41.1401: use only SAX61.., SKD32.50 or SKD82.50.
4) For media temperatures > 130 °C use electrohydraulic actuators SKD.. (N4561), SKB.. (N4564).
5) Δp_{max} AB⇄A B = max. permissible differential pressure in diverting mode
6) DN 15…50: Flange dimensions for PN 16 and PN 25
DN 65…150: Flange dimensions only for PN 25
7) Valves no longer in the active sale
8) SAV..: This product line of actuators might not be available in all countries. Please talk to your local contact or consult your local internet pages of www.buildingtechnologies.siemens.com.
9) Only in compbination with SKC..

2.5.2 Stroke actuators − 2-port valves

Typical applications	Stroke actuators	Data Sheet	Stroke / Positioning force	20 mm / 800 N		40°mm / 1600 N	
• Heating plants • Ventilation and air conditioning plants • Heat generation • Heat distribution • District heating plants	**SAX..** **SAV..** [5]	N4501 N4503		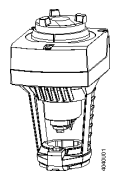		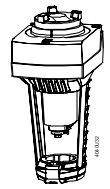	
				SAX..		SAV..	
Valves **Basic Doc. (P4030)**				**Δp_s** [kPa]	**Δp_{max}** [kPa]	**Δp_s** [kPa]	**Δp_{max}** [kPa]
Valves **Data Sheet**	**Valve type**	**DN**	**k_{vs}** [m³/h]				
PN6 N4310	**VVF21.22...25** [1) 4)]	25	1.9 / 3 / 5 / 7,5	600	300	-	-
	VVF21.25-.. [2) 4)]		2.5 / 4 / 6.3 / 10				
	VVF21.39..-40 [1) 4)]	40	12 / 19	500			
	VVF21.40-.. [2) 4)]		16 / 25				
	VVF21.50 [4)]	50	31	300			
	VVF21.50-40 [4)]		40				
	VVF21.65 [4)]	65	49	175	175		
	VVF21.65-63 [4)]		63				
	VVF21.80-78 [4)]	80	78	100	100		
	VVF21.80-100 [4)]		100				
	VVF21.90 [6)]	100	124	-	-		
-10…130 °C [3)]	**VVF21.100-160** [6)]	100	160				
PN6 N4401	**VVF22.25-..**[2)]	25	2.5 / 4 / 6.3 / 10	600	300	-	-
	VVF22.40-..[2)]	40	16 / 25	550		600	300
	VVF22.50-40	50	40	350			
	VVF22.65-63	65	63	200	150	450	
	VVF22.80-100 [1)]	80	100	125	75	250	225
-10…130 °C	**VVF22.100-160** [1)]	100	160	-	-	160	160
PN10 N4320	**VVF31.15-..** [2) 4)]	15	2.5 / 4	1000	300	-	-
	VVF31.24...25 [1) 4)]	25	5 / 7,5				
	VVF31.25-.. [2) 4)]		6.3 / 10				
	VVF31.39...40 [1) 4)]	40	12 / 19	525			
	VVF31.40-.. [2) 4)]		16 / 25				
	VVF31.50 [4)]	50	31	325			
	VVF31.50-40 [4)]		40				
	VVF31.65 [4)]	65	49	175	175		
	VVF31.65-63 [4)]		63				
	VVF31.80 [4)]	80	78	100	100		
-10…130 °C [3)]	**VVF31.80-100** [4)]		100				
PN10 N4402	**VVF32.15-..**[2)]	15	1.6 / 2.5 / 4	1000	400	-	-
	VVF32.25-..[2)]	25	6.3 / 10				
	VVF32.40-..[2)]	40	16 / 25	550		1000	400
	VVF32.50-40	50	40	350	300	750	
	VVF32.65-63	65	63	200	150	450	
	VVF32.80-100[2)]	80	100	125	75	250	225
	VVF32.100-160[2)]	100	160	-	-	160	125
	VVF32.125-250	125	250			125	90
-10…130 °C [4)]	**VVF32.150-400**[2)]	150	400			80	80
PN16 N4330	**VVF40.15-..** [2) 4)]	15	1.9 / 2.5 / 3 / 4	1600	300	-	-
	VVF40.25-.. [2) 4)]	20	5 / 6.3 / 7.5 / 10	1550			
	VVF40.40-.. [2) 4)]	40	12 / 16 / 19 / 25	525			
	VVF40.50-.. [2) 4)]	50	31 / 40	325			
	VVF40.65-.. [2) 4)]	65	49 / 63	175	175		
-10…130 °C [3)]	**VVF40.80-..** [2) 4)]	80	78 / 100	100	100		
PN16 N4340	**VVF41.49** [4)]	50	19	350	300	-	-
-10…130 °C [3)]	**VVF41.50** [4)]		31				

Typical applications	Stroke actuators	Data Sheet	Stroke / Positioning force	20 mm / 800 N		40°mm / 1600 N	
• Heating plants • Ventilation and air conditioning plants • Heat generation • Heat distribution • District heating plants	**SAX..** **SAV..** [5]	N4501 N4503		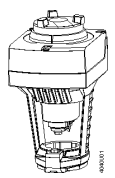		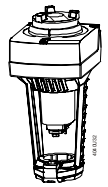	
				SAX..		SAV..	
Valves **Basic Doc. (P4030)**				**Δp_s** [kPa]	**Δp_{max}** [kPa]	**Δp_s** [kPa]	**Δp_{max}** [kPa]
Valves **Data Sheet**	**Valve type**	**DN**	**k_{vs}** [m³/h]				
PN16 N4403	**VVF42.15-..** [2]	15	1,6 / 2,5 / 4	1600	400	-	-
	VVF42.20-6.3	20	6,3				
	VVF42.25-.. [2]	25	6,3 / 10				
	VVF42.32-16	32	16	900			
	VVF42.40-.. [2]	40	16 /25	550		1250	400
	VVF42.50-.. [2]	50	31,5 / 40	350	300	750	
	VVF42.65-.. [2]	65	50 / 63	200	150	450	
	VVF42.80-.. [2]	80	80 / 100	125	75	250	
	VVF42.100-.. [2]	100	125 / 160	-	-	160	225
	VVF42.125-.. [2]	125	200 / 250			125	125
-10…130 °C [3]	**VVF42.150-..** [2]	150	315 / 400			80	80
PN16 N4403	**VVF42.50-40K**	50	40	1600	400	-	-
	VVF42.65-63K	65	63				
	VVF42.80-100K	80	100				
	VVF42.100-160K	100	160	-	-	1600	400
	VVF42.125-250K	125	250				
-10…130 °C [3]	**VVF42.150-360K**	150	360			1400	
PN16 N4404	**VVF43.65-..** [2]	65	50 / 63	-	-	450	400
	VVF43.80-.. [2]	80	80 / 100			250	225
	VVF43.100-.. [2]	100	125 / 160			160	125
	VVF43.125-.. [2]	125	200 / 250			125	90
20…130 °C [3]	**VVF43.150-..** [2]	150	315 / 400			80	60
PN25 N4373	**VVF52.15-..** [2] [4]	15	0.16 / 0.2 / 0.25 / 0.32 / 0.4 / 0.5 0.63 / 0.8 / 1 / 1.25 / 1.6 / 2 / 2.5 / 3.2 / 4	2500	1600	-	-
	VVF52.25-.. [2] [4]	25	5 / 6.3 / 8 / 10	1500	1200	-	-
-20…130 °C [3]	**VVF52.40-..** [2] [4]	40	12.5 / 16 / 20 / 25	500	400	-	-
PN25/16 N4405	**VVF53.15-..** [2]	15	0.16 / 0,2 / 0.25 / 0.32 / 0,4 / 0.5 / 0.63 / 0,8 / 1 / 1.25 / 1.6 / 2 / 2.5 / 3.2 / 4	2500	1200	-	-
	VVF53.20-6.3	20	6.3				
	VVF53.25-.. [2]	25	5 / 6.3 / 8 / 10	1600			
	VVF53.32-16	32	16	900	750		
	VVF53.40-.. [2]	40	12.5 / 16 / 20 / 25	550	500	1250	1150
	VVF53.50-.. [2]	50	31.5 / 40	350	300	750	700
PN25	**VVF53.65-63**[)]	65	63	-	-	450	400
	VVF53.80-100[)]	80	100			250	225
	VVF53.100-160	100	160			160	125
	VVF53.125-250	125	250			125	90
-20…130 °C [3]	**VVF53.150-360**	150	360			80	60
PN16 N4363	**VVG41.11...12** [1]	15	0.63 / 1	1600	800	-	-
	VVG41.13	15	1.6				
	VVG41.14	15	2.5				
	VVG41.15	15	4				
	VVG41.20	20	6.3				
	VVG41.25	25	10	1550			
	VVG41.32	32	16	875			
	VVG41.40	40	25	525	525		
-25…130 °C [3]	**VVG41.50**	50	40	300	300		

[1] Insert running number instead of k_{vs} value
[2] .. = insert k_{vs} value
[3] For media temperatures > 130 °C use electrohydraulic actuators SKD.. (N4561), SKB.. (N4564).
[4] Valves no longer in the active sale
[5] SAV..: This product line of actuators might not be available in all countries. Please talk to your local contact or consult your local internet pages of www.buildingtechnologies.siemens.com
[6] Only in combination with SKC..

2.5.3 Stroke Acutuators – combi valves

	Valves				Actuators					
					SAY..P..		SAX..P..		SAV..P..	
			DN	H_{100}	Δp_{max}	Δp_s	Δp_{max}	Δp_s	Δp_{max}	Δp_s
	Standard flow rate	High flow rate		[mm]	[kPa]	[kPa]	[kPa]	[kPa]	[kPa]	[kPa]
PN25 N4855	**VPI46.40F9.5Q**	-	40	15	400	400	-	-	-	-
	VPI46.50F12Q	-	50							
PN16 N4315	**VPF43.50F16**	**VPF43.50F25**	50	20	-	-	600	600	-	-
	VPF43.65F24	**VPF43.65F35**	65							
	VPF43.80F35	**VPF43.80F45**	80							
	VPF43.100F70	**VPF43.100F90**	100	40	-	-	-	-	600	600
	VPF43.125F110	**VPF43.125F135**	125							
	VPF43.150F160	**VPF43.150F200**	150	43						
PN25 N4315	**VPF53.50F16**	**VPF53.50F25**	50	20	-	-	600	600	-	-
	VPF53.65F24	**VPF53.65F35**	65							
	VPF53.80F35	**VPF53.80F45**	80							
	VPF53.100F70	**VPF53.100F90**	100	40	-	-	-	-	600	600
	VPF53.125F110	**VPF53.125F135**	125							
	VPF53.150F160	**VPF53.150F200**	150	43						

2.5.4 Rotary actuators – slipper and butterfly valves

Typical applications	Rotary actuators	Data Sheet	Angular rotation / Torque		90° 10 Nm	90° 20 Nm	90° 40 Nm
• Heating plants • Ventilation and air conditioning plants • Heat generation • Heat distribution • District heating plants	**SAL..**	N4502			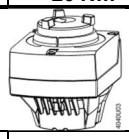		
					SAL..T10	**SAL..T20**	**SAL..T40**
Slipper valves	**Data Sheet**	**Valve type**	**DN**	**k_{vs} [m³/h]**	**Mounting set**	**Δp_{max} [kPa]**	
PN6	N4241	**VBF21.40**	40	25	ASK32N	30	-	-
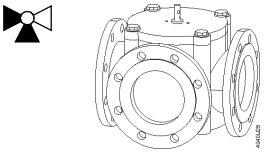		**VBF21.50**	50	40				
		VBF21.65	65	63	ASK31N			
		VBF21.80	80	100				
		VBF21.100	100	160				
		VBF21.125	125	550				
1 °C...120 °C		**VBF21.150**	150	820				
Butterfly valves						**Δp_s [kPa]**	
PN16	N4131	**VKF41.40** [2]	40	50	ASK33N	500	-	-
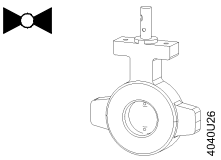		**VKF41.50** [2]	50	80	ASK33N			
		VKF41.65 [2]	65	200	ASK33N			
		VKF41.80 [2]	80	400	ASK33N			
		VKF41.100 [2]	100	760	ASK33N			
		VKF41.125 [2]	125	1000	ASK33N	300		
		VKF41.150 [3]	150	2100	ASK33N	250	-	400
-10 °C…120 °C		**VKF41.200** [3]	200	4000	ASK33N	125	-	300
PN16	N4136	**VKF46.40** [4]	40	50	-	-	1600	-
		VKF46.50 [4]	50	85	-			
		VKF46.65 [4]	65	215	-			
		VKF46.80 [4]	80	420	-		-	1600
		VKF46.100 [4]	100	800	-			1200
-10 °C…120 °C		**VKF46.125** [4]	125	1010	-			800

1) SAL..T10 rotary actuators only fit on VBF21.., DN65…150. For VBF21.., DN40/50 use SQK34.., SQK84.. or SQK33.00 rotary actuators.

2) VKF41.. maximum flow speed with SAL.T10 actuator with water DN40.. DN125 = 4 m/

3) VKF41.. maximum flow speed with SAL.T0 actuator with water DN150/200 = 2.5 m/s, with SAL.T40 actuator with water DN150/200 = 4 m/s

4) VKF46.. maximum flow speed water = 4.5 m/s, air 40 m/s

2.6 Accessories

2.6.1 Electrical accessories

Product no.	Auxiliary switch ASC10.51	Potentiometer ASZ7.5 [1)]	Function module AZX61.1	Stem heating element ASZ6.6
Stock no.	S55845-Z103	S55845-Z106	S55845-Z107	S55845-Z108
	Max. 2			Max. 1
SAX31..	Max. 2	Max. 1	-	Max. 1
SAX61..		-	Max. 1	
SAX61.03/MO		-	-	
SAX81..		Max. 1	-	
SAX31P..	Max. 2	Max. 1	-	-
SAX61P..		-	Max. 1	
SAX61P03/MO		-	-	
SAX81P..		Max. 1	-	
SAV31..	Max. 2	Max. 1	-	Max. 1
SAV61..		-	Max. 1	
SAV61.00/MO		-	-	
SAV81..		Max. 1	-	
SAV31P..	Max. 2	Max. 1	-	-
SAV61P..		-	Max. 1	
SAV61P00/MO		-	-	
SAV81P..		Max. 1	-	
SAL31..	Max. 2	Max. 1	-	-
SAL61..		-	Max. 1	
SAL81..		Max. 1	-	
SAY31P..	Max. 2	Max. 1	-	-
SAY61P..		-	Max. 1	
SAY61P03/MO		-	-	
SAY81P..		Max. 1	-	

Notes on ASZ7.5 [1)]

For the combination SIMATIC S5/S7 and position feedback message, we recommend actuators with DC 0…9.8 V feedback signals.

The signal peaks that occur in the potentiometer ASZ7.5 may result in error messages on Siemens SIMATIC.
This is not the case when combined with Siemens HVAC controllers.
The reason is that SIMATIC has a higher resolution and faster response time.
Use a 3-wire connection as the voltage divider for the potentiometer.
Powering the potentiometer over the wiper may result in a shorter lifecycle.
Signal peaks occurring in this operating mode increase in frequency and severity throughout its lifecycle.

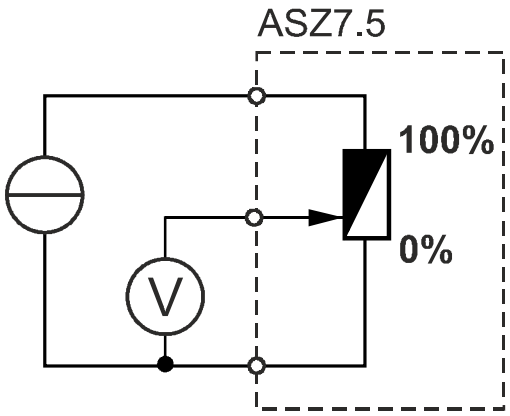

2.6.2 Mechanical accessories

Product no.	Weather shield ASK39.1 [1]	Mounting set				
		ASK31N for VBF21..	ASK32N for VBF21..	ASK32N for VBI31.. [2] VCI31.. [2] VBG31.. [2]	ASK33N for VKF41..	ASK35N for VKF45.. [3]
Stock no	S55845-Z109	S55845-Z100	S55845-Z211		S55845-Z101	S55845-Z102
SAY..	Max. 1	-	-		-	-
SAX..						
SAV..						
SAL..						
SAL..T10	Max. 1	DN 65…150	DN 40…50	✓	✓	-
SAL..T20		-	-		-	DN 40…65
SAL..T40					DN 150…200	DN 80...200

[1] SA..61../MO are not suitable for outdoor applications.

[2] Types VBI31.., VCI31.., and VBG31.. are available only while stock lasts from 2019 on.

[3] In 2000 VKF45.. line was replaced by VKF46.. line.

2.7 Product replacements

Replacement of SQX.. / SQL.. actuators by SAX.. / SAL.. actuators.

Note

- When replacing actuators consider positioning force, torque and positioning times.
- Adjust in the controller the parameter "Running time" respectively "Positioning time", to ensure stable control.
- The replacement of accessory items needs to be taken into consideration also. In that case, compatibility is not necessarily ensured.

2.7.1 Stroke actuators SQX.. to SAX..

SQX..		Pos. time [s]	Pos. force [N]	SAX..	Pos. time [s]	Pos. force [N]	VVF21../VXF21.. VVF31../VXF31.. VVF40../VXF40..	VVF41../VXF41.. VVG41../VXG41..	VVF51.. VVF52..
							DN15…80	DN15…50	DN15…40
SQX31.. [1]	SQX31.00	150	500	SAX31.00	120	800	✓	✓	✓
	SQX31.03	35	500	SAX31.03	30	800	✓	✓	✓
SQX61..	SQX61	35	500	SAX61.03	30	800	✓	✓	✓
	SQX61U	35	500	SAX61.03U	30	800	✓	✓	✓
SQX81..	SQX81.00	150	500	SAX81.00	120	800	✓	✓	✓
	SQX81.00U	150	500	SAX81.00U	120	800	✓	✓	✓
	SQX81.03	35	500	SAX81.03	30	800	✓	✓	✓
	SQX81.03U	35	500	SAX81.03U	30	800	✓	✓	✓
SQX32..	SQX32.00	150	700	SAX31.00	120	800	✓	✓	✓
	SQX32.03	35	700	SAX31.03	30	800	✓	✓	✓
SQX62..	SQX62	35	700	SAX61.03	30	800	✓	✓	✓
	SQX62U	35	700	SAX61.03U	30	800	✓	✓	✓
SQX82..	SQX82.00	150	700	SAX81.00	120	800	✓	✓	✓
	SQX82.00U	150	700	SAX81.00U	120	800	✓	✓	✓
	SQX82.03	35	700	SAX81.03	30	800	✓	✓	✓
	SQX82.03U	35	700	SAX81.03U	30	800	✓	✓	✓

[1] SQX31.06: Actuator for gas valves. Either replace complete valve-actuator combination or clarify required positioning time and replace only actuator. Consider if mounting set is required.

2.7.2 Rotary actuators SQL.. to SAL..

SQL..				SAL..		
		Pos. time [s]	**Torque** [Nm]		**Pos. time** [s]	**Torque** [Nm]
SQL31..	SQL31.10	120	12,5	SAL31.00T10	120	10
SQL32..	SQL32.10	125	12,5	SAL31.00T10	120	10
	SQL32.12	70	12,5	SAL31.00T10 or	120	10
				SAL31.03T10 [1]	30	10
	SQL32.13	30	5	SAL31.03T10	30	10
SQL33..	SQL33.00	125	12,5	SAL31.00T10	120	10
	SQL33.03	30	10	SAL31.03T10	30	10
SQL83..	SQL83.00	125	12,5	SAL81.00T10	120	10
	SQL83.04	30	10	SAL81.03T10	30	10
SQL35..	SQL35.00	125	20	SAL31.00T20 [2]	120	20
	SQL35.00	125	20	SAL31.00T40 [2]	120	40
SQL85..	SQL85.00	125	20	SAL81.00T20 [2]	120	20
	SQL85.00	125	20	SAL81.00T40 [2]	120	40

[1] SAL.. positioning time differs from that of SQL32.12 and SQL32.13 rotary actuators. Consider positioning time when replacing.

[2] use SAL.T20 on VKF46.40, VKF46.50 and VKF46.65
use SAL.T40 on VKF46.80, VKF46.100 and VKF46.125

Rotary actuators		**SQL..**				**SAL..**		
		SQL31..	SQL32..	SQL33.. SQL83..	SQL35.. SQL85..	**SAL31.00T10 SAL31.03T10 SAL81.00T10 SAL81.03T10**	**SAL31.00T20 SAL81.00T20**	**SAL31.00T40 SAL81.00T40**
VBF21..	DN 40 / DN 50 [1]	-	-	ASK32	-	**ASK32N**	-[1]	-[1]
	DN 65…150	-	-	ASK31	-	**ASK31N**	-	-
VBF31..	DN 40 / DN 50 [2]	-	-	ASK32	-	**ASK32N**	-[2]	-[2]
	DN 65…100	-	-	ASK31	-	**ASK31N**	-	-
B3f..	DN 40 / DN 50 [2]	Direct	ASK25	ASK31	-	-	-	-
	DN 65…150	Direct	ASK25	ASK31	-	**ASK31N**	-	-
C1f..	DN 40 / DN 50 [2]	Direct	-	ASK31	-	-	-	-
	DN 65…100	Direct	-	ASK31	-	**ASK31N**	-	-
K1i..	DN 20…32	Direct	ASK24	ASK33	-	**ASK33N**	-	-
K1f..	DN 40…200	Direct	ASK24	ASK33	-	**ASK33N**	-	-
VKF41..	DN 40…125	-	-	ASK33	-	**ASK33N**	-	-
	DN 150 / DN 200	-	-	ASK33	ASK35	**ASK33N**	**-**	**ASK33N**
VKF45..	DN40…65	-	-	-	ASK35	**-**	**ASK35N**	**ASK35N**
	DN80...200					**-**	**-**	**ASK35N**

[1] Replace with rotary actuators SQK34.., SQK84.. (data sheet N4508) or SQK33.00 (data sheet N4506).

[2] Replace with rotary actuators SQK33.00 + ASK32

Note

D Rotary actuators SAL.. are not suited for mounting sets ASK24, ASK25, ASK31, ASK32, ASK33, ASK35, ASK40 and ASK41.

2.7.3 Electrical accessories

Notes

- If an auxiliary switch is required, its switching point should be indicated on the plant schematic.
- For media below 0 °C the stem heating element ASZ6.6 keeps the valve free from freezing.
- For this case, do not insulate the actuator bracket and the valve stem, as air circulation must be ensured!
- **Non-observance of the above may result in accidents and fires!**
- **Do not touch the hot parts without prior protective measures to avoid burns.**

Stroke actuators		SQX..				SAX..	
		SQX31..	SQX61..	SQX32..	SQX62..	**SAX31..**	**SAX61..**
		SQX81..	-	SQX82..	-	**SAX81..**	-
ASZ6.5	Stem heater	ASZ6.5	ASZ6.5	ASZ6.5	ASZ6.5	**ASZ6.6**	**ASZ6.6**
ASZ7.4	1 auxiliary switch, 1 potentiometer (1000 Ω)	ASZ7.4	-	ASZ7.4	-	**ASC10.51 + ASZ7.5**	-
ASC9.4	Double auxiliary switch	ASC9.4	-	ASC9.4	-	**2x ASC10.51**	-
ASC9.5	Auxiliary switch	ASC9.5	-	ASC9.5	-	**ASC10.51**	-

Rotary actuators		SQL..				SAL..	
		SQL31..	SQL32..	SQL33..	-	**SAL31..T10**	-
		-	-	SQL83..	-	**SAL81..T10**	-
		-	-	-	SQL35.00	-	**SAL31.00T20 / T40**
		-	-	-	SQL85.00	-	**SAL81.00T20 / T40**
ASZ7.4	1 auxiliary switch, 1 potentiometer (1000 Ω)	-	-	ASZ7.4	ASZ7.4	**ASC10.51 + ASZ7.5**	**ASC10.51 + ASZ7.5**
ASC9.4	Double auxiliary switch	-	-	ASC9.4	ASC9.4	**2x ASC10.51**	**2x ASC10.51**
ASC9.5	Auxiliary switch	-	-	ASC9.5	ASC9.5	**ASC10.51**	**ASC10.51**
ASZ8.4	Potentiometer (220 Ω)	ASZ8.4	ASZ8.4	-	-	[1)]	-
ASZ9.4	Potentiometer (2800 Ω)	ASZ9.4	ASZ9.4	-	-	[1)]	-
ASC1.4	Auxiliary switch	ASC1.4	ASC1.4	-	-	**ASC10.51**	-

[1)] Used auxiliary switches or potentiometer (order accessories additionally were applicable):
- Check used functionality
- Check compatibility with controller

2.8 Spare parts

The following spare part sets are available:

SAY.., SAX.., SAV..

Stock number 8000060843	Housing cover 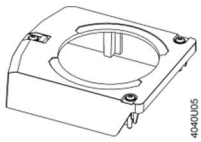 	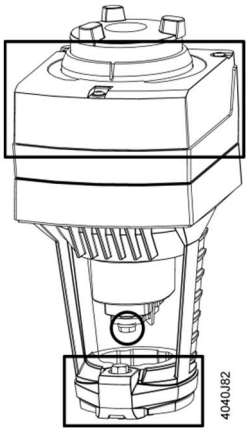
	Screw (valve stem coupling) 	
	U-bracket 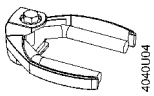 	

Single components from the spare part sets are not available.

SAL..

Stock number 8000060844	Housing cover 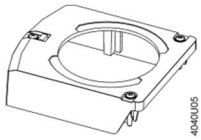 	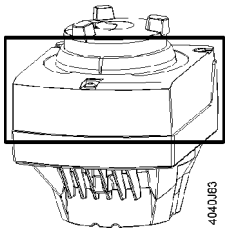
	2 adapters 1 pc. 14 mm 1 pc. 11 mm	
	4 screws 2 pcs. M5 x 20 mm 2 pcs. M6 x 20 mm	

Single components from the spare part sets are not available.

2.9 Sizing

2.9.1 Parallel operation of actuators

SA..31.. and SA..81..

3-position actuators must have one specific controller each, refer to "Connection diagrams" (page 78).

SA..61..

Up to 10 actuators can drive in parallel on a controller output with a rating of 1 mA. Modulating actuators have an input impedance of 100 kΩ.

SA..61../MO

The Modbus converter is designed for analog control on 0..10 V on the actuator side.
Note: Keep the setting of the analog signal on the actuator as is (switch 1 to "OFF"), adjustment is not allowed.

The actuators are factory-set to equal-percentage characteristic curve.
Note: The DIL switch (actuator-internal changeover of characteristic curve) must be set to "log" (switch 2 to "OFF").

2.9.2 Permissible cable lengths and wire cross-sectional areas

Cable lengths and wire cross-sectional areas depend on the following criteria of the actuators:

- Current draw
- Permissible voltage drop across the power supply lines

The control accuracy of the modulating actuators can be improved by using 4-wire connections, thus ensuring that voltage drops on G0 will not distort the positioning signal.

Note

When determining the cable length and the wire cross-sectional area, adherence to the permissible operating voltage tolerance at the actuator is of importance, in addition to the permissible voltage drop across the operating voltage and signal lines (see table below).

Product no.	Operating voltage	Terminal	Max. permissible voltage drop
SA..31..	AC 230 V	N, Y1, Y2	2% each (total of 4%)
SA..61..	AC/DC 24 V	G0, G G0, Y, U	4% each (total of 8%) 1% each (at DC 0…10 V)
SA..81..		G, Y1, Y2	4% each (total of 8%)

The following criteria must be considered:

- With modulating control, the permissible positioning signal error must not exceed 1%, the reason being the voltage drop on the G0 wire.
- The voltage drop, caused by charging current peaks in the actuator's DC circuit, must not exceed 2 Vpp.
- If the G0 line is not correctly sized, load changes of the actuator due to changes of the DC voltage drop might lead to self-oscillations.
- The operating voltage drop at AC/DC 24 V may be a maximum of 8% (4% above the G0 wire).

Basic diagram − voltage drop across the power supply cables

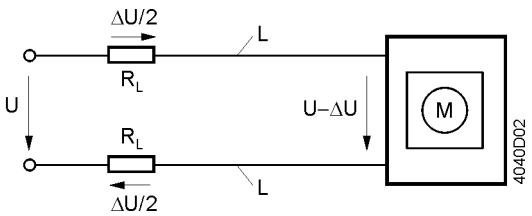

The following diagram can be used to determine the cable lengths and wire cross-sectional areas.

L/P-diagram for AC/DC 24 V

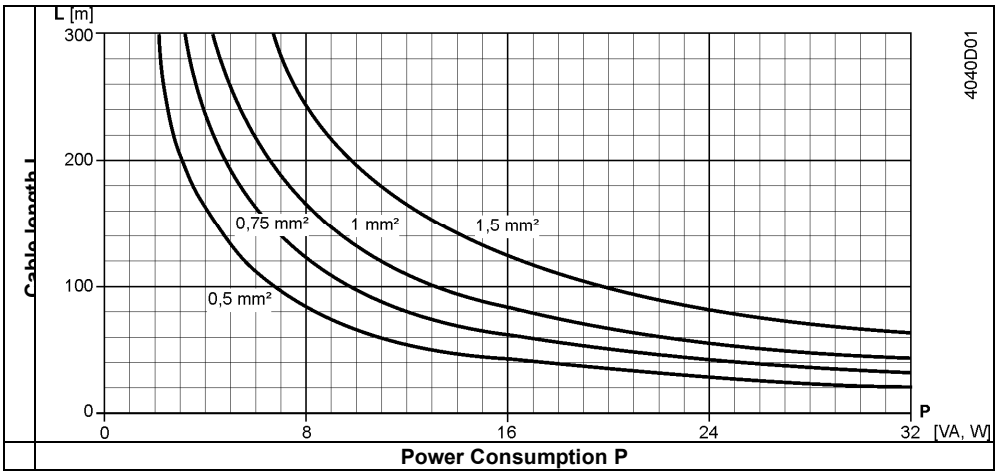

Permissible cable length **L** as a function of power **P** and cross-sectional area of wire as a parameter

Note

P is the decisive power consumption of all actuators connected in parallel. When operating on AC 24 V, power consumption is in VA; when operating on DC 24 V, in W.

Formulas for wire lengths

Operating voltage	Permissible voltage drop / wire	Formula for wire length
AC 230 V	2% of AC 230 V	$L = 46 \bullet \frac{1313 \bullet A}{P}$ [m]
AC/DC 24 V	4% of AC 24 V	$L = \frac{1313 \bullet A}{P}$ [m]
	1% of DC 10 V	$L = \frac{5.47 \bullet A}{I(DC)}$ [m]

A Cross-sectional area of wire in mm^2
L Permissible wire length in m
P Power consumption in VA (AC) or W (DC) (see actuator's rating plate)
I(DC) DC current part (in A) on G0 wire

2.10 Warranty

The engineering data specified in chapter "Equipment combinations" (page 14) are only guaranteed in connection with the Siemens valves listed.

Note

When using the actuators in connection with valves of other manufacture, correct functioning must be ensured by the user, and Siemens will assume no responsibility.

3 Handling

3.1 Mounting and installation

3.1.1 Mounting positions

Indoor use	Outdoor use [1) 2)]
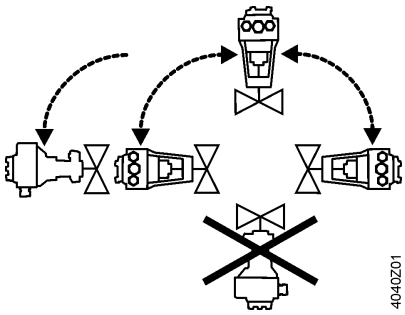	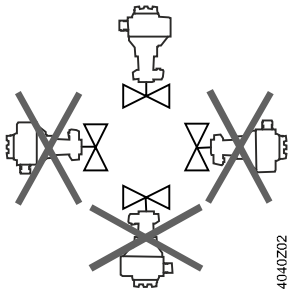

[1)] Only in connection with weather shield ASK39.1

[2)] SA..61../MO are not suitable for outdoor applications.

3.1.2 Fitting stroke actuators to seat valves VVF.. / VXF.. or VVG.. / VXG..

First, observe "Mounting positions" (page 25).

	Caution! **Risk of burns from hot surfaces!** If you touch heated parts, you will get burns as result. • Allow to cool parts. • Wear protective gloves.

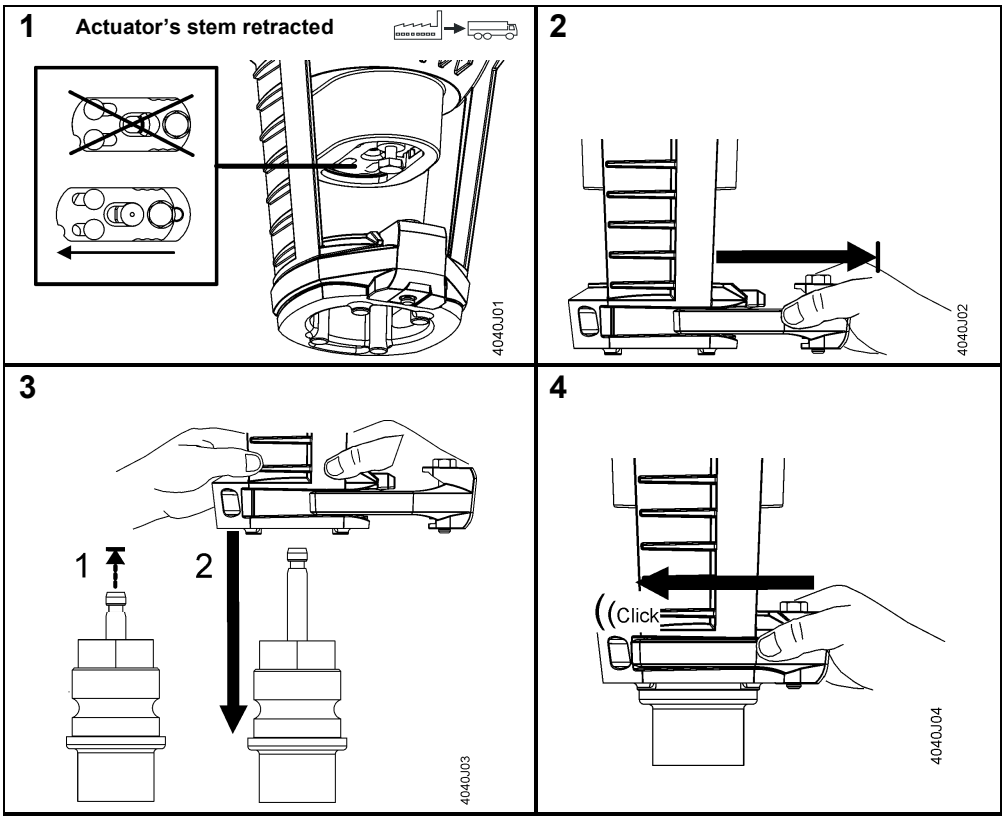

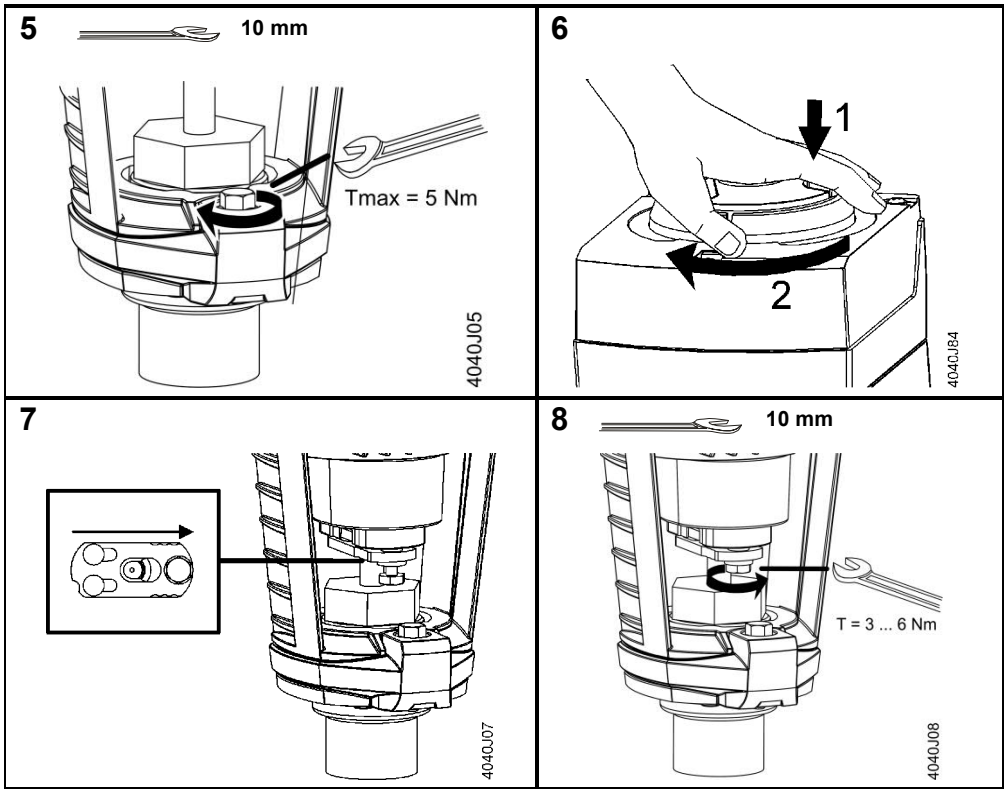

3.1.3 Avoid missalignement on V_G41 valves with fittings

	Caution!
	Risk of burns from hot surfaces! If you touch heated parts, you will get burns as result. • Allow to cool parts. • Wear protective gloves.

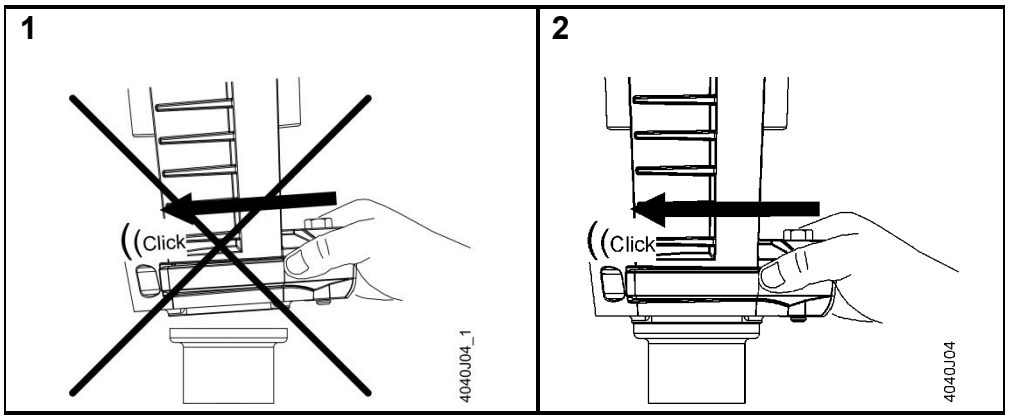

On threaded valves it’s possible that the actuator is missaligned on the valve due to a collision with the fitting. If so, please take care for correct mounting, either by turning the actuator or by adjusting the fitting (e.g. use a second sealing to change fitting position).

3.1.4 Fitting rotary actuators to butterfly valves VKF41..

First, observe "Mounting positions" (page 25).

Mounting set ASK33N

Scope of delivery			
Mounting set (2 parts)	5 screws	1 adapter inc. fixing screw	1 adapter
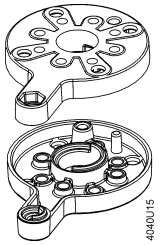	4 pcs. M6 x 16 mm 1 pc. M5 x 20 incl. nut 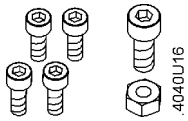	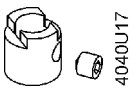	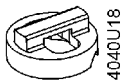

Note

Actuators SAL.. are not compatible with mounting sets ASK31, ASK32, ASK33, ASK35, ASK40, and ASK41.

	Caution! **Risk of burns from hot surfaces!** If you touch heated parts, you will get burns as result. • Allow to cool parts. • Wear protective gloves.

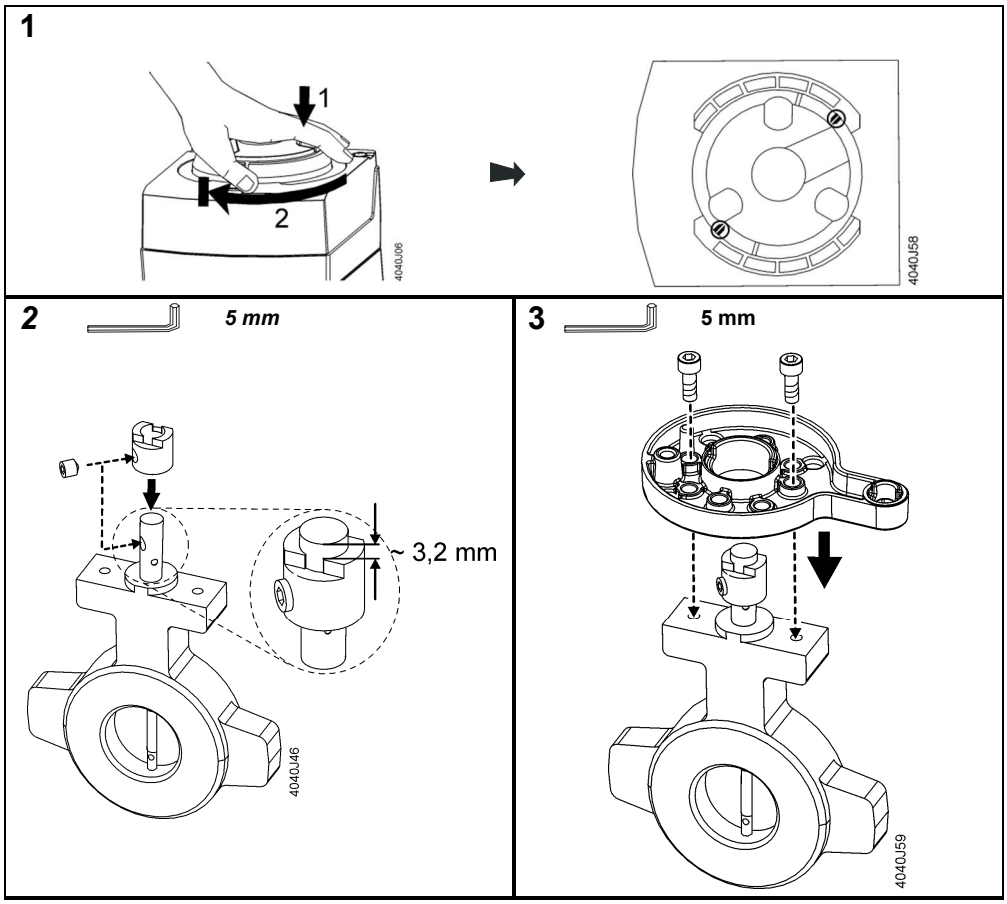

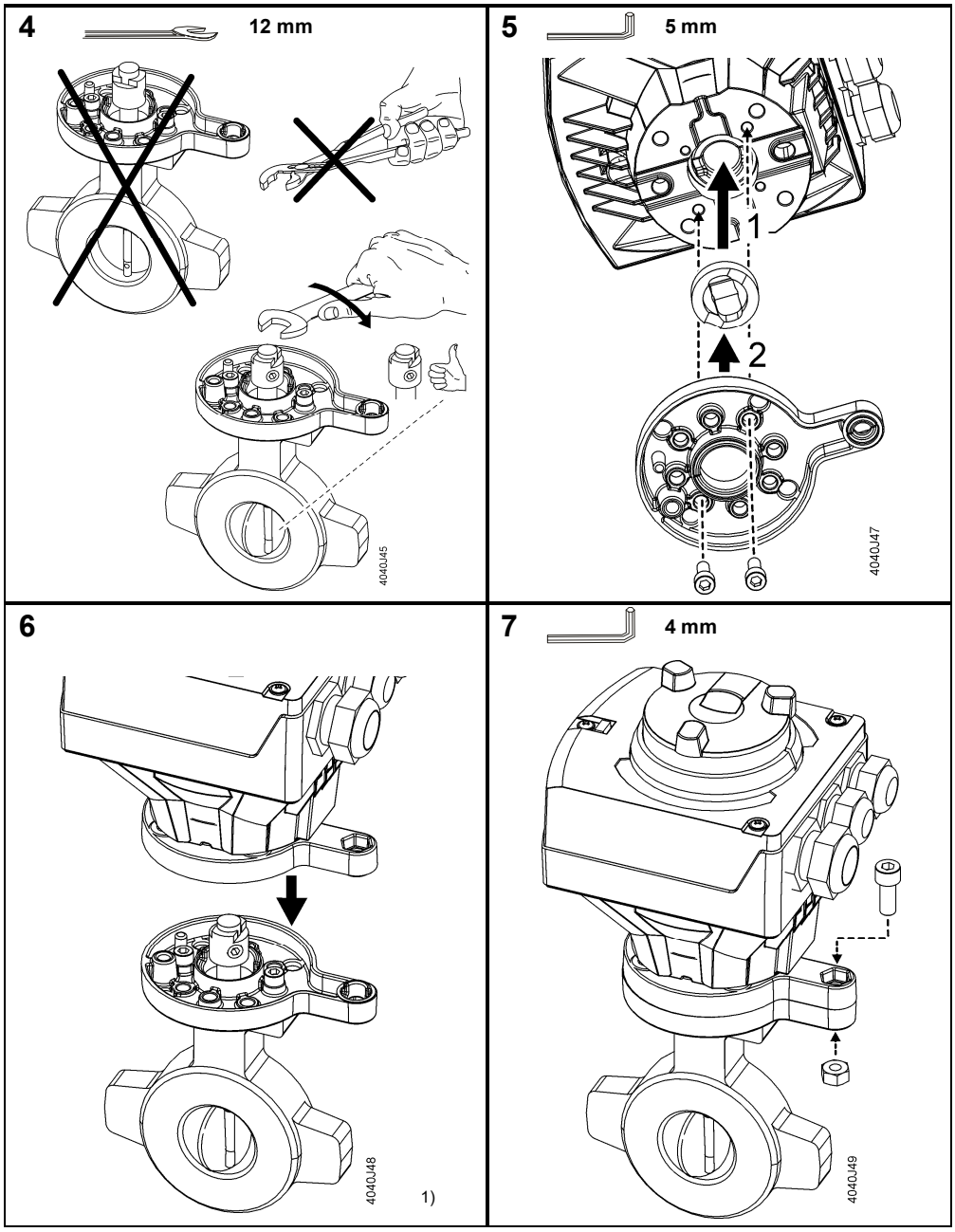

[1] Angle position errors between actuator shaft and valve stem must be corrected via manual control (refer to "Manual adjuster" page 69).

3.1.5 Fitting rotary actuators to slipper valves VBF21..

First, observe "Mounting positions" (page 25).

Mounting set ASK31N

Scope of delivery			
Mounting set (2 parts)	5 screws	1 adapter inc. fixing screw	1 adapter
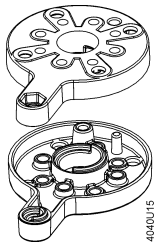	4 pcs. M6 x 16 mm 1 pc. M5 x 20 mm incl. nut 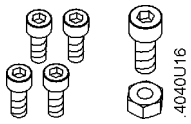	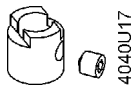	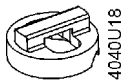

Mounting set ASK32N for VBF21.., DN 40…50

Mounting set (2 parts)	5 screws	1 adapter
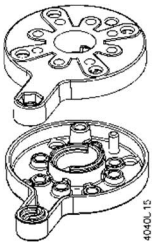	4 pcs. M6 x 16 mm 1 pc. M5 x 20 mm incl. nut 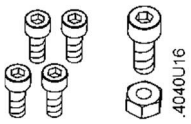	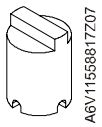

With VBF21.. (e.g. DN 125), the following steps must be performed prior to fitting the mounting set.

	Caution! **Risk of burns from hot surfaces!** If you touch heated parts, you will get burns as result. • Allow to cool parts. • Wear protective gloves.

1

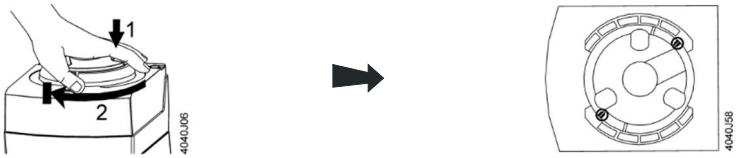

2a **ASK31N**

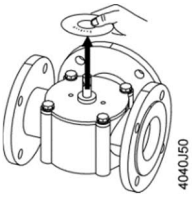

2b **ASK32N** **10 mm, 13 mm**

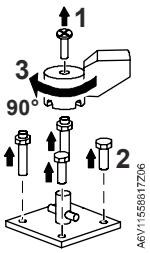

Opening
counterclockwise

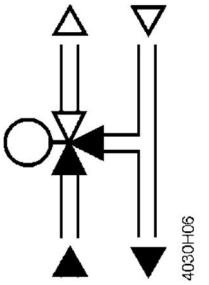

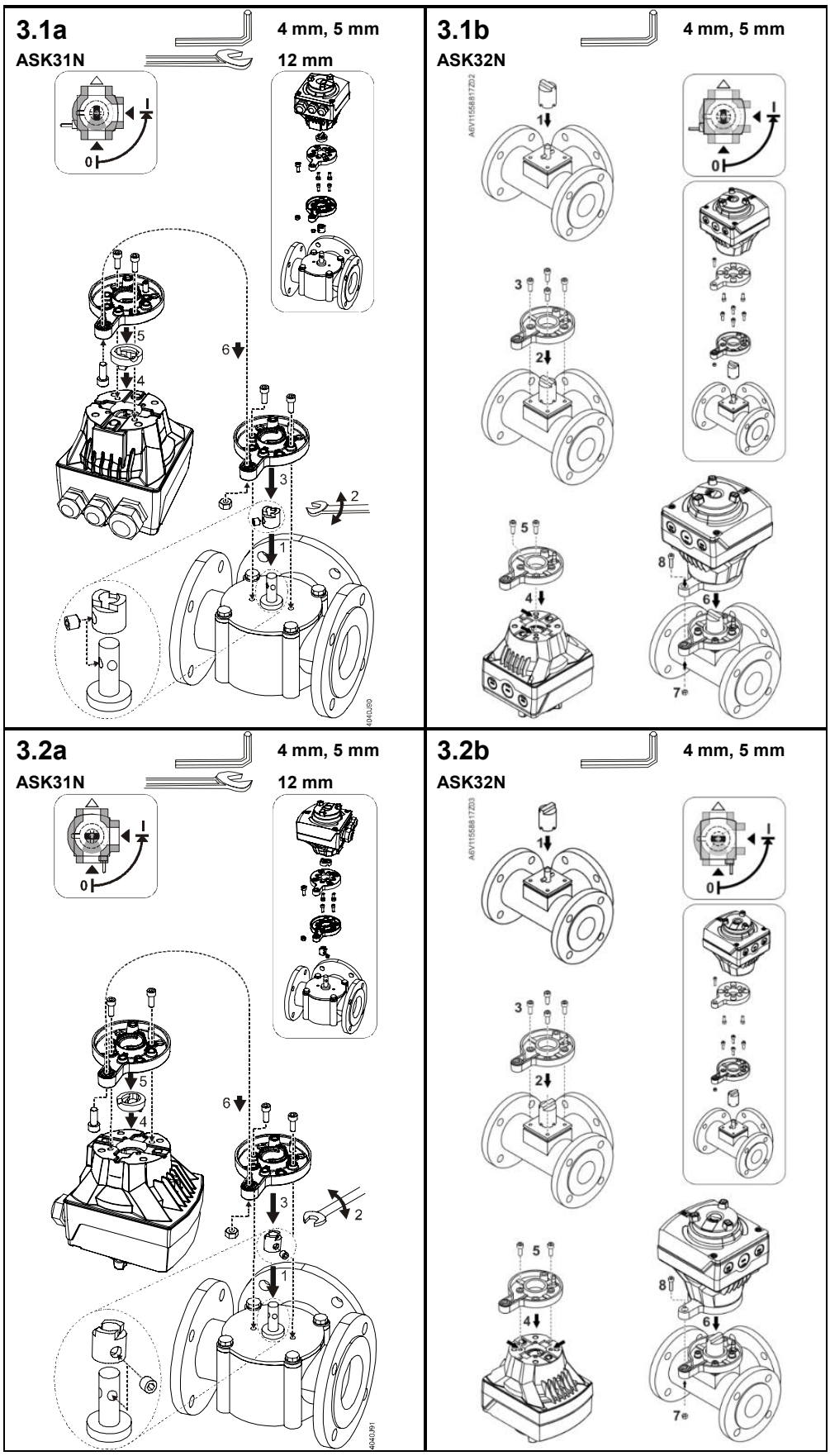

Opening clockwise

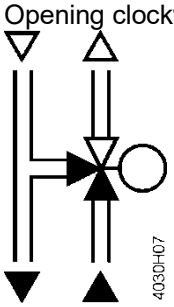

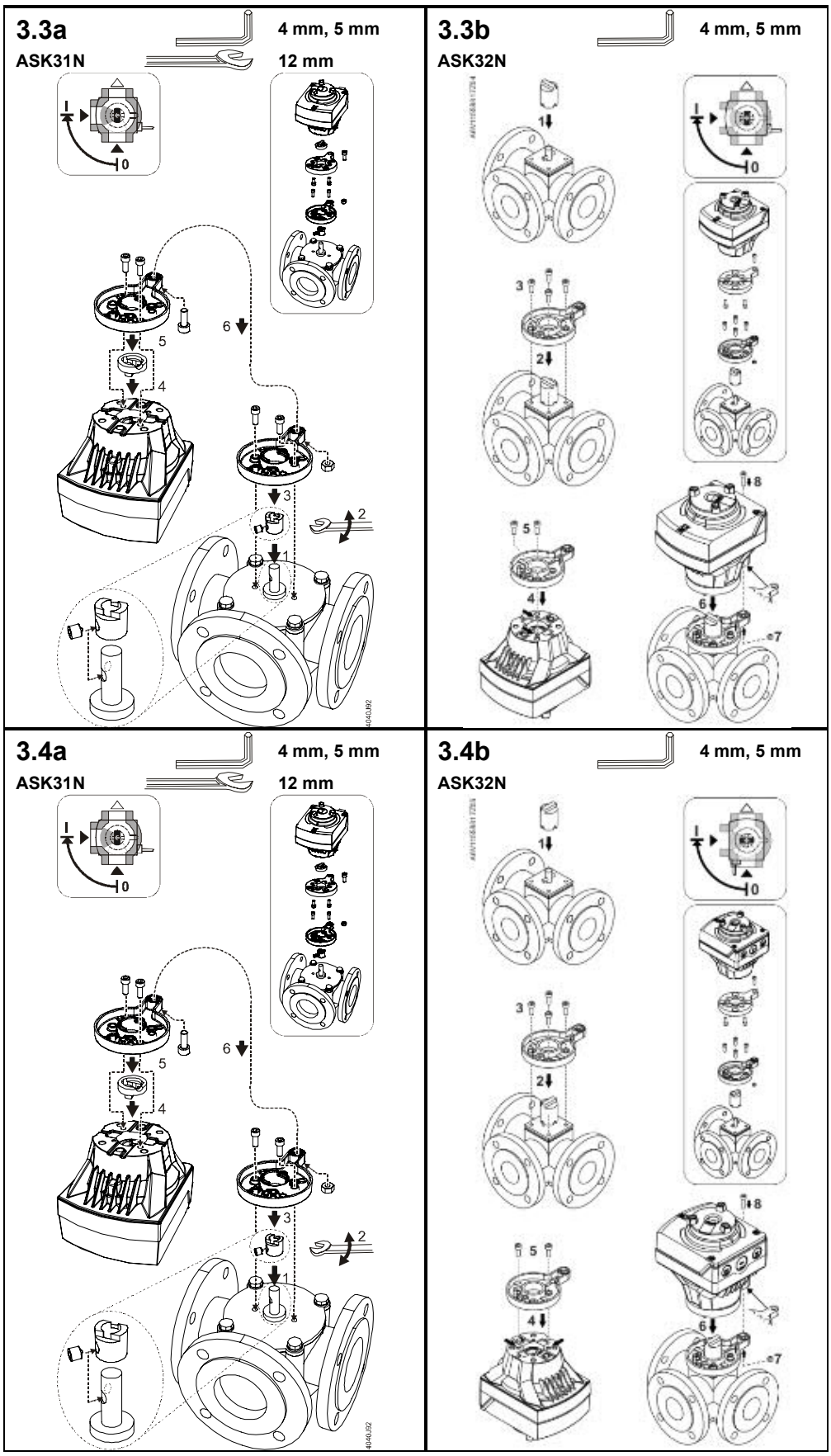

For further mounting positions of VBF 21.. and routing of the connection cables the rotary actuators and adapters must be mounted according to the sketches above.

3.1.6 Fitting rotary actuators to butterfly valves VKF46..

First, observe "Mounting positions" (page 25).

Standard scope of delivery
VKF46..

Product no.	Scope of delivery			
	2 screws		1 dapter	
SAL..T20	2 pcs. M5 x 20 mm		1 pc. 11 mm	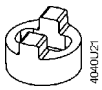
SAL..T40	2 pcs. M6 x 20 mm		1 pc. 14 mm	

	Caution! **Risk of burns from hot surfaces!** If you touch heated parts, you will get burns as result. • Allow to cool parts. • Wear protective gloves.

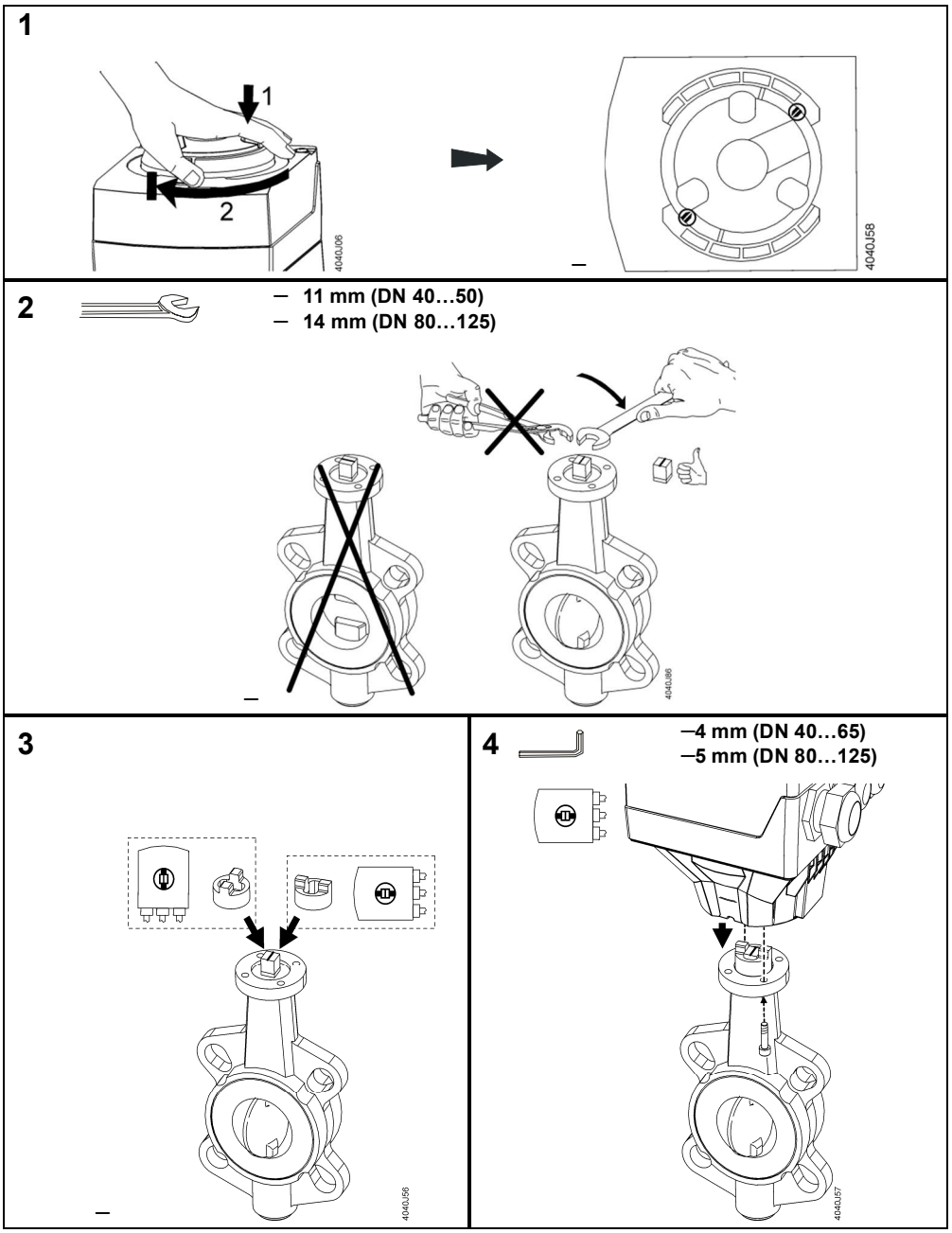

3.1.7 Fitting rotary actuators to butterfly valves VKF45..

First, observe "Mounting positions" (page 25).

Mounting set ASK35N
For VKF45..

Scope of delivery		
Mounting set (2 parts)	5 screws	2 adapters
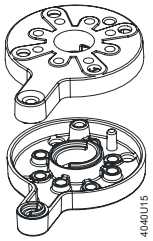	2 pcs. M8 x 50 mm 1 pc. M5 x 20 mm incl. nut 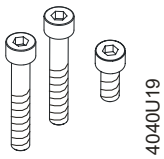	1 pc. 12 mm 1 pc. 16 mm 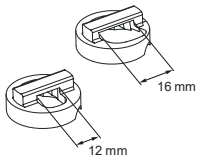

Note

Actuators SAL.. are not suited for use with mounting sets ASK31, ASK32, ASK33, ASK35, ASK40, and ASK41.

	Caution! **Risk of burns from hot surfaces!** If you touch heated parts, you will get burns as result. • Allow to cool parts. • Wear protective gloves.

1

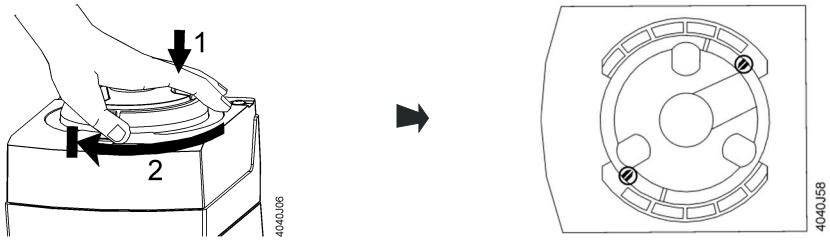

2

12 mm (DN 40…125)
16 mm (DN 150 / 200)

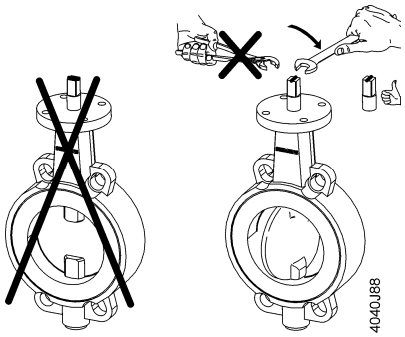

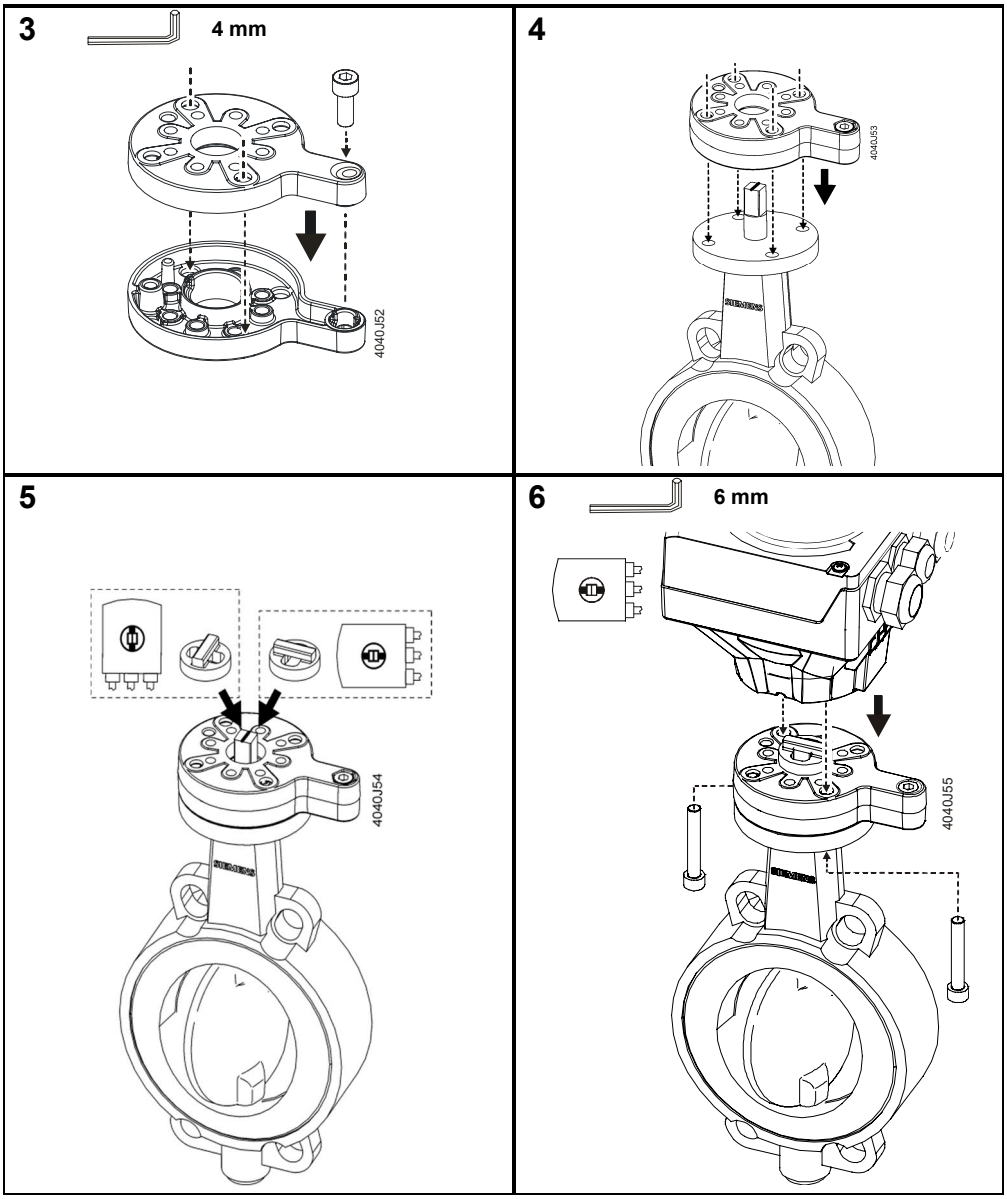
3
4 mm
4040J52
4
4040J53
5
4040J54
6
6 mm
4040J55

3.1.8 Fitting accessories

Special notes on mounting

Before fitting the accessory items shown below, the following steps must be performed:

SA..31..

	Danger!
	Danger to life from electrical current! There is an immediate risk of fatal injury in case of contact with live parts of SA..31... • Disconnect actuator from power.

1. Actuator is mechanically connected to a Siemens valve.
2. Observe compatibility and choice of combinations. Refer to "Accessories" (page 19).
3. Disconnect actuator from power.
4. Only required with actuators without fail safe function: Using the manual adjuster, drive the actuator's stem to the fully retracted position and fix the coupling. See "Manual operation" and "Fixing coupling" (page 69).
5. When mounting two different accessories watch out for correct plug-in space A or B (see below).
6. To fit an auxiliary switch, potentiometer or function module, the housing cover must be removed.

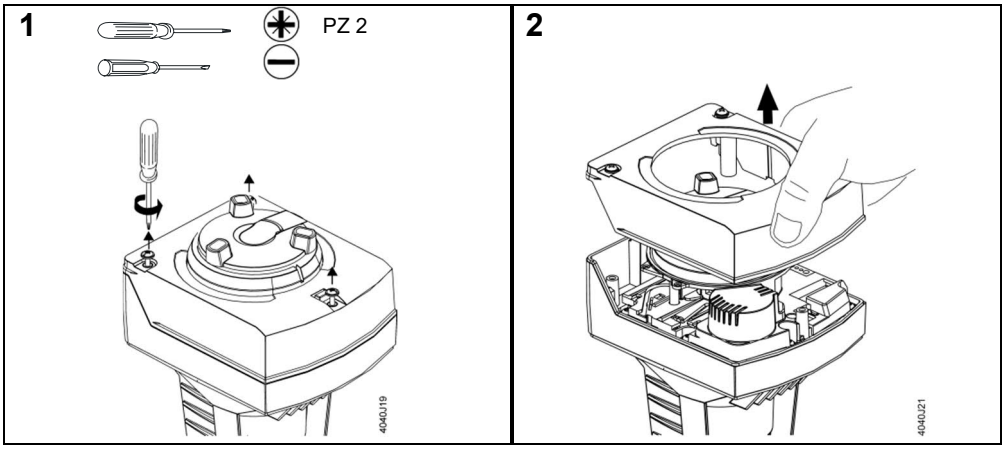

Interior view of setting elements and plug-in spaces

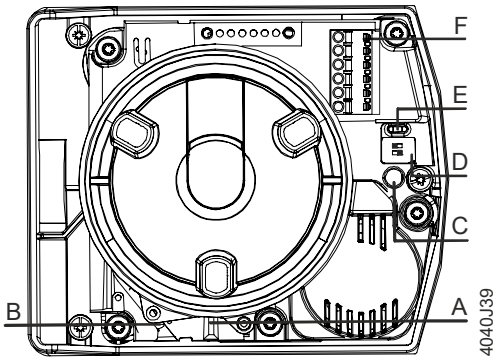

A	Plug-in space for… • **Potentiometer** ASZ7.5, or • **Auxiliary switch** ASC10.51
B	Plug-in space for… • **Function module** AZX61.1 , or • **Auxiliary switch** ASC10.51
C	LED
D	DIL switches
E	Calibration slot
F	Connection terminals

Potentiometer ASZ7.5

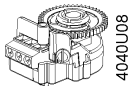

Scope of delivery		
1 potentiometer ASZ7.5	1 screw	2 screw covers
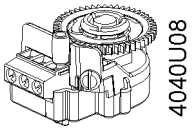	1 pc.	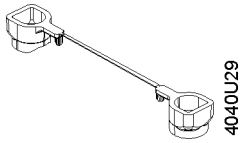

First, observe "Special notes on mounting" (page 35).
Also observe "Notes on ASZ7.5" (page 19).

	Danger!
	Danger to life from electrical current! If a live wire gets in contact with the screws the whole actuator housing is a live. • Fit the screw covers first.

Plug-in space A

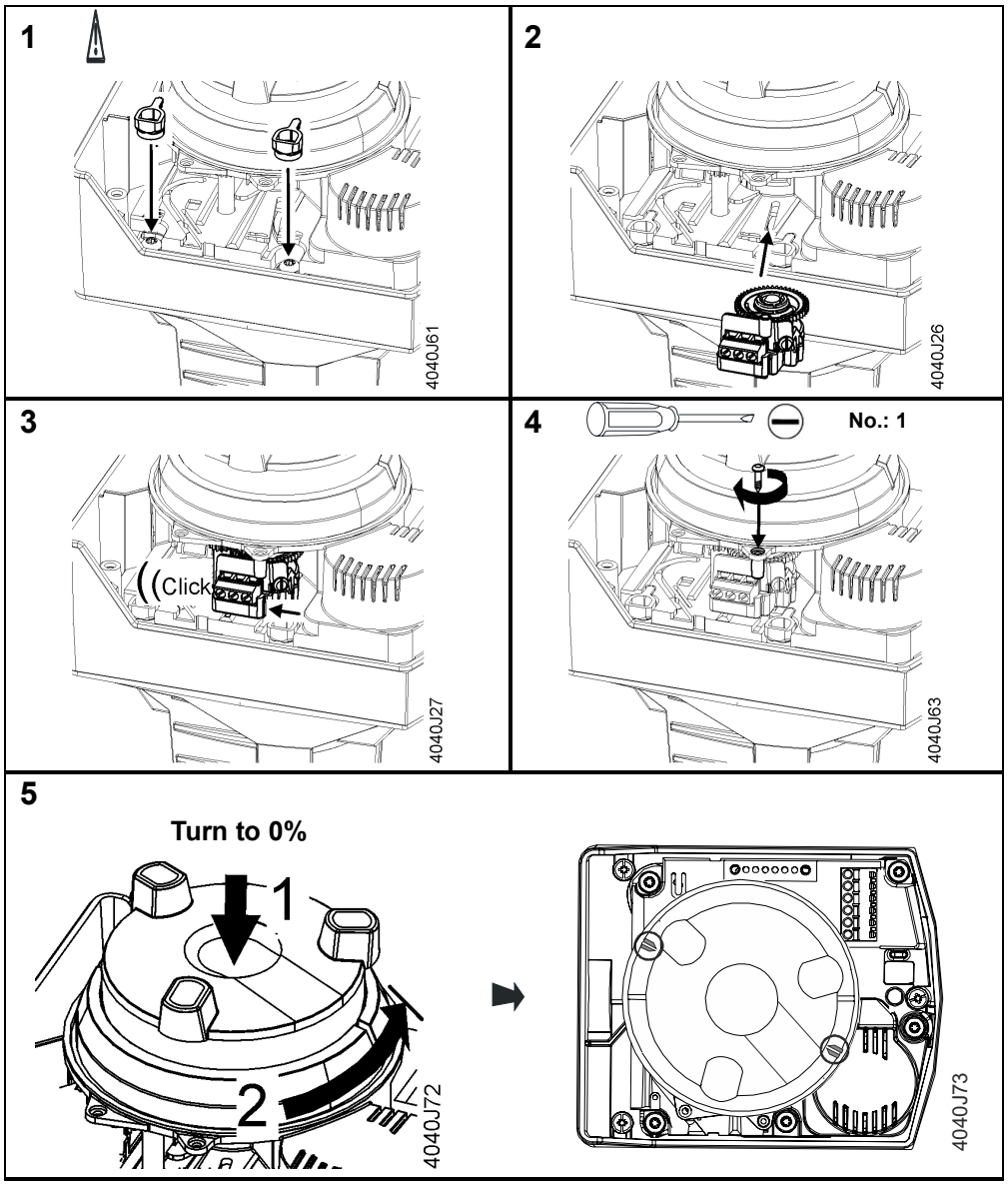

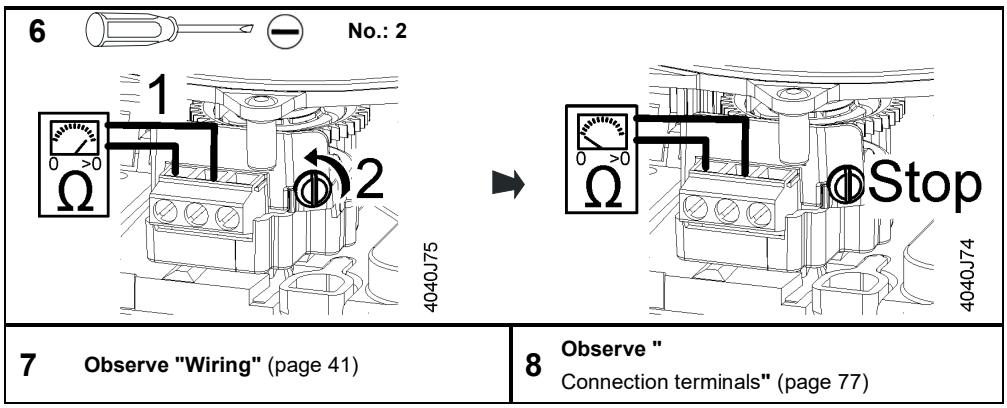

7 **Observe "Wiring"** (page 41)	**8** **Observe "** Connection terminals**"** (page 77)

Function module AZX61.1

Plug-in space B

First, observe "Special notes on mounting" (page 35).

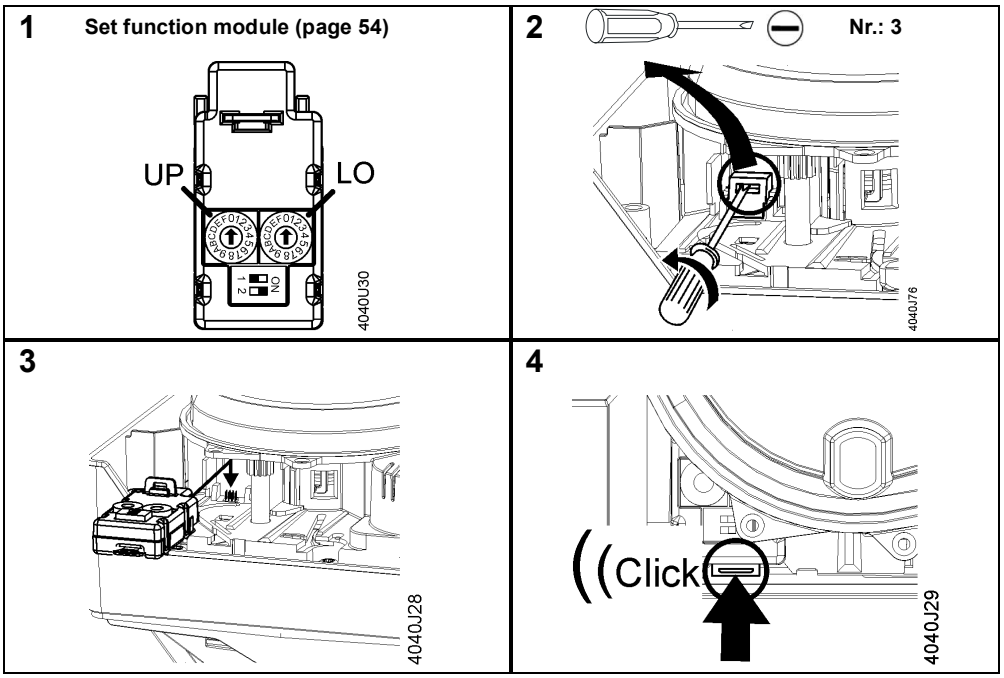

Auxiliary switch ASC10.51

Scope of delivery		
1 auxiliary switch ASC10.51	1 screw	2 screw covers
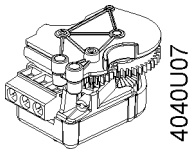	1 pc.	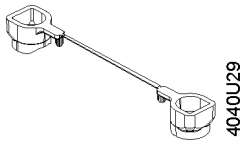

First, observe "Special notes on mounting" (page 35).

	Danger!
	Danger to life from electrical current! If a live wire gets in contact with the screws the whole actuator housing is a live. • Fit the screw covers first.

Plug-in space A

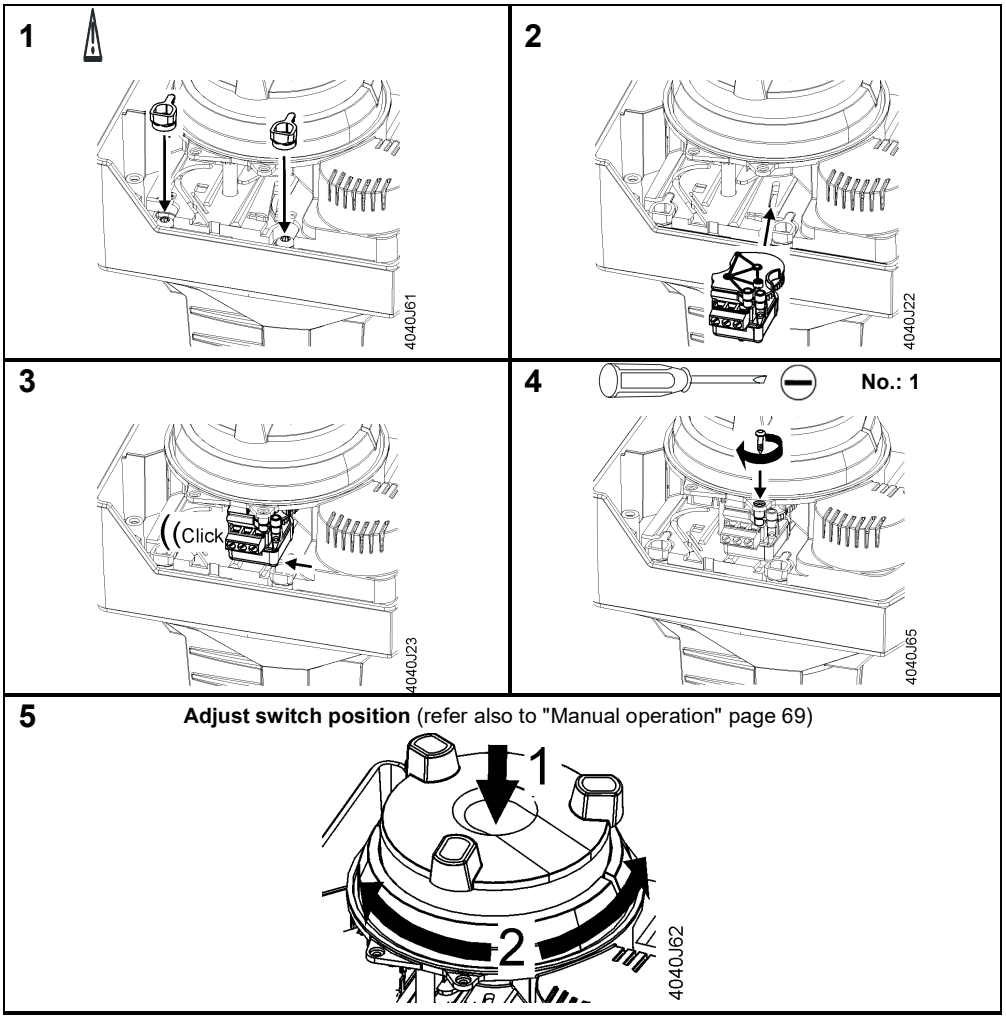

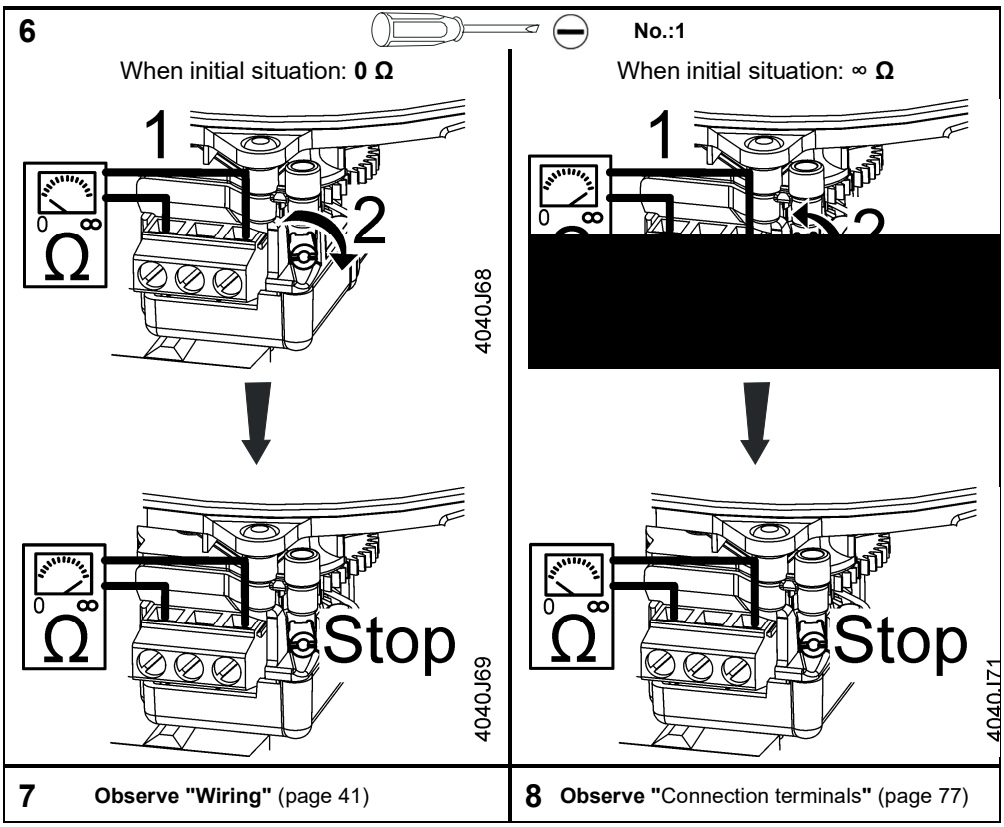

First, observe "Special notes on mounting" (page 35).

	Danger!
	Danger to life from electrical current! If a live wire gets in contact with the screws the whole actuator housing is a live. • Fit the screw covers first.

Plug-in space B

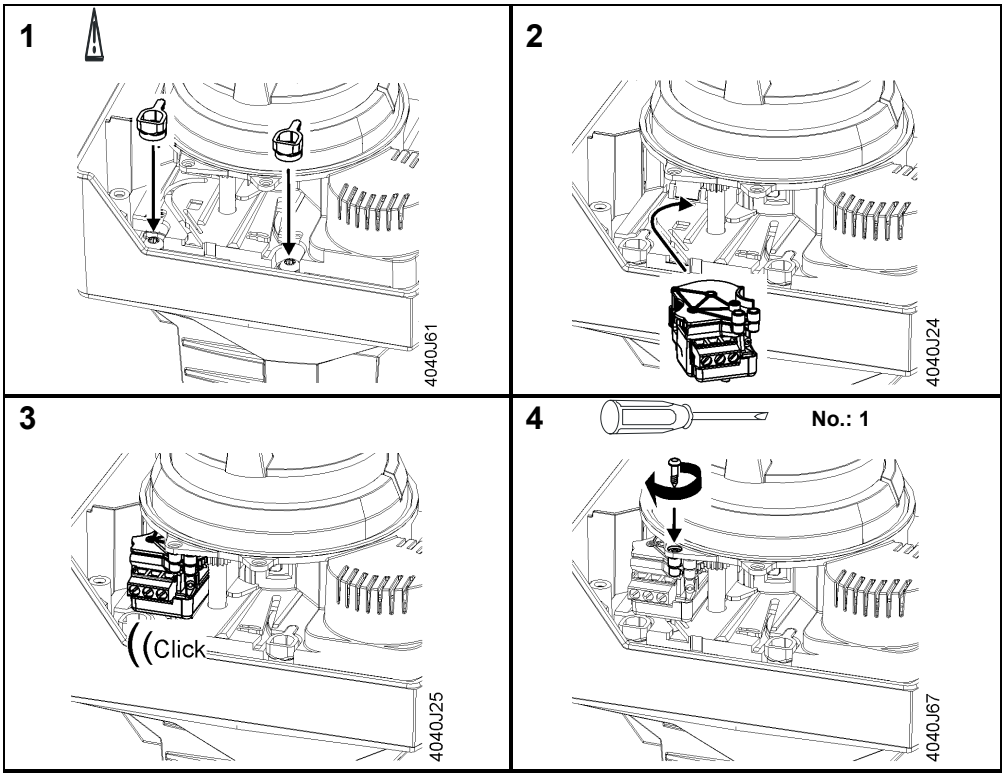

5 **Adjust switch position** (refer also to "Manual operation" page 69)

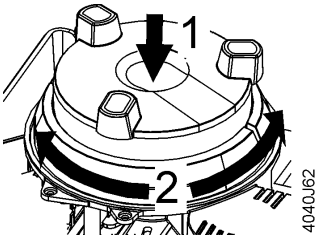

6 **No.: 1**

When initial situation: **0 Ω**

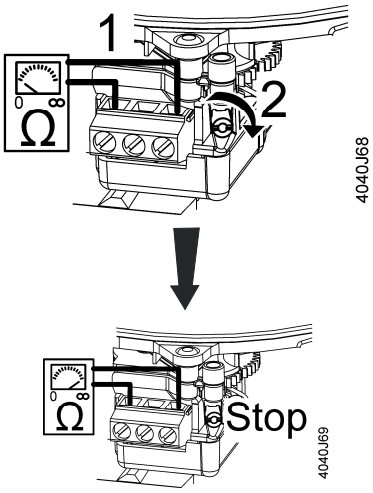

When initial situation: **∞ Ω**

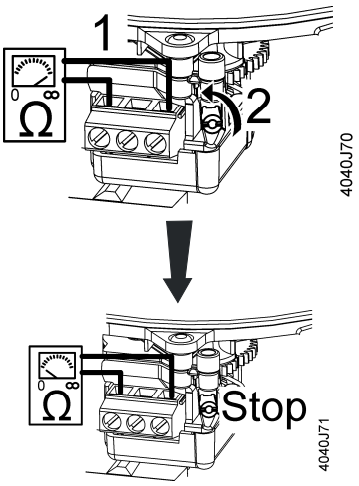

7 **Observe "Wiring"** (page 41)

8 **Observe "**Connection terminals**"** (page 77)

Stem heating element ASZ6.6

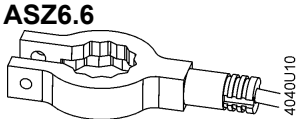

Scope of delivery	
1 stem heating element ASZ6.6	1 screw
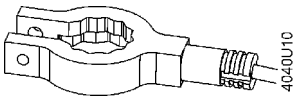	1 pc. M4 x 30 incl. nut 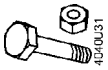

When fitting the stem heating element, stroke actuator and valve must be assembled. The stem heating element is powered separately.
First, observe "Special notes on mounting" (page 35).

1 **10 mm** **14 mm**

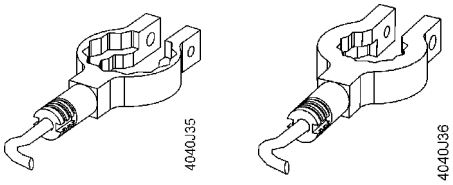

2

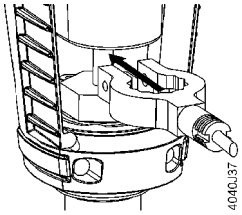

3

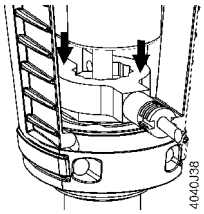

4 8 mm

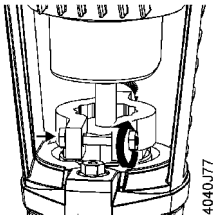

Weather shield ASK39.1

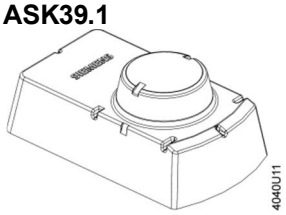

First, observe "Special notes on mounting” (page 35).

Scope of delivery	
Weather shield ASK39.1	2 UV-proof cable ties
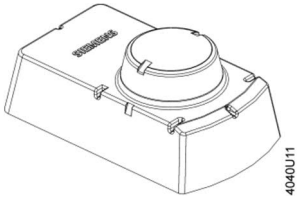	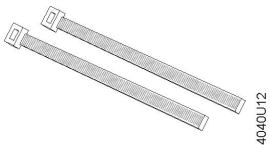

Notes

- To protect the actuator when used outdoors, the weather shield must always be fitted.
- If fitted several times, 2 UV-proof cable ties (800 x 4 mm) must be used.
- The manual adjuster cannot be used when the weather shield is mounted.
- SA..61../MO are not suitable for outdoor applications.

1	2
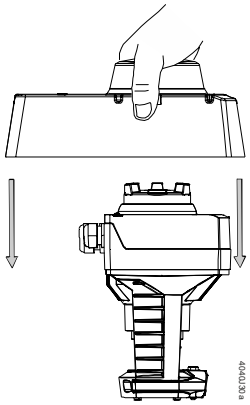	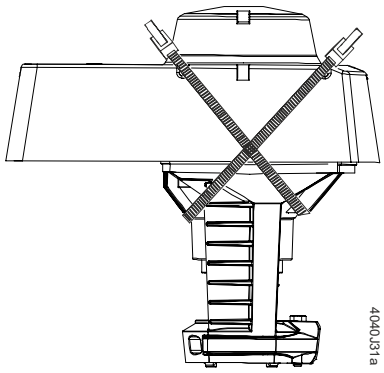

3.1.9 Wiring (installation)

Conduct the electrical connections in accordance with local regulations on electrical installations as well as the "Connection diagrams" on page 77.

Preparation of wire endings

The cable endings must be prepared before as follows.

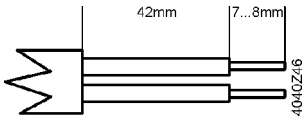

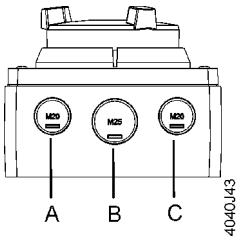

A	EU: M20 US: ½“	Standard	Connection actuator
B	EU: M25 US: ½“	Ground cable for outdoor installation	
C	EU: M20 US: ½“		Connection accessories

Cable glands (not contained in scope of delivery)		
Metric	Metric	Inch thread
M20	M25	½“
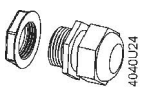	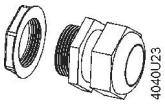	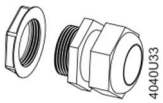

Prior to installation, the following preconditions must be satisfied:

- Actuator is mechanically connected to a Siemens valve.
- Housing cover is removed (step 6 "Special notes on mounting", page 35).

Communicating actuators

Device contains fixed connecting cable. Left cable duct used (A).

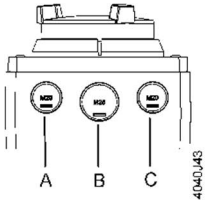

Actuator

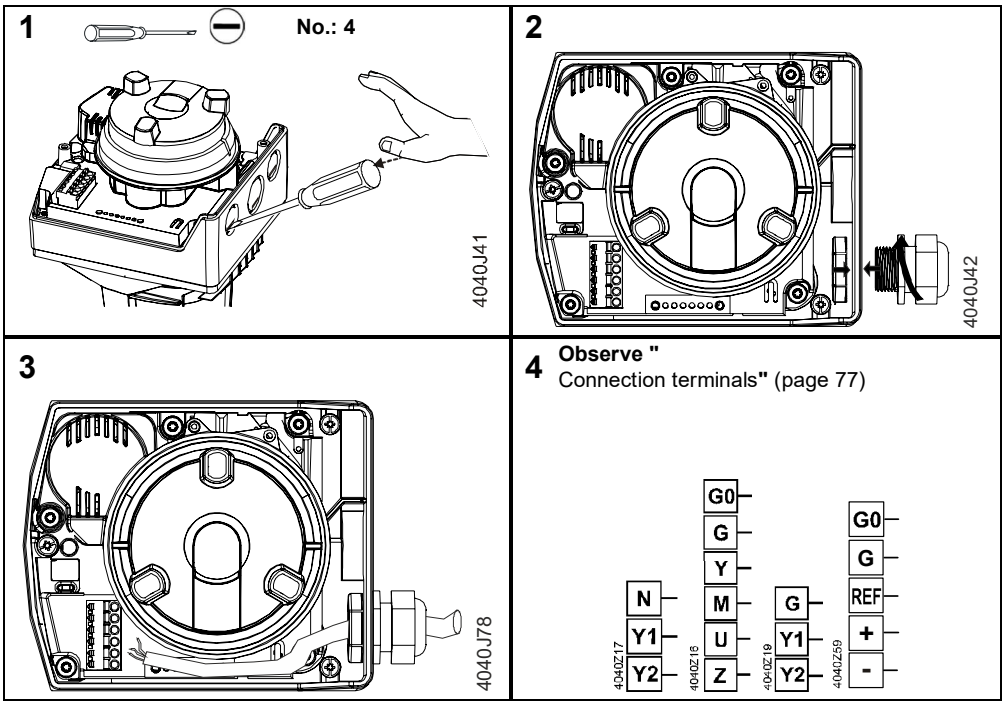

Auxiliary switch ASC10.51

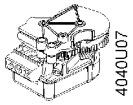

and

Potentiometer ASZ7.5

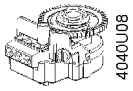

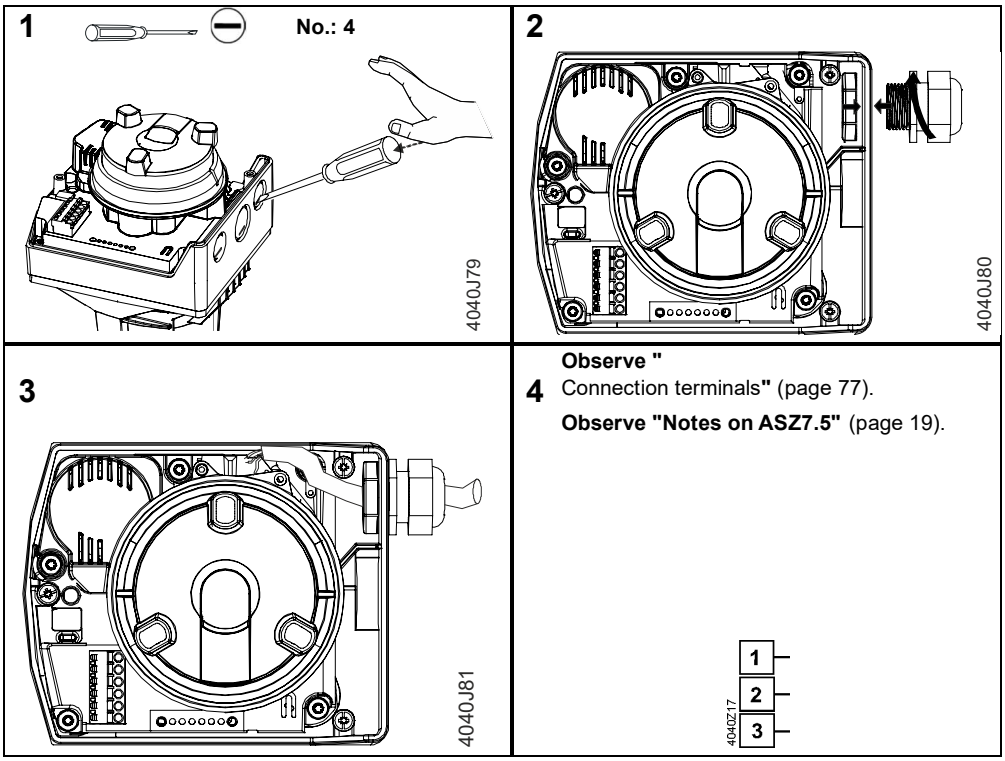

3.2 Commissioning and operation

3.2.1 Function check and Calibration

Mechanically

Before making the function check, the following preconditions must be satisfied:
- Environmental conditions specified in chapter "Technical data" (page 73)
- Actuator is mechanically connected to a Siemens valve
- **Actuator is in "Manual operation" mode** (page 69).

The actuator can be operated with the help of the "Manual adjuster" (see page 69).

Manual adjuster	Stroke actuator	Rotary actuator	Control path valve A→AB	Bypass valve B → AB
Turning in clockwise direction	Actuator's stem extends	Actuator's spindle turns in clockwise direction	Opening	Closing
Turning in counter-clockwise direction	Actuator's stem retracts	Actuator's spindle turns in counterclockwise direction	Closing	Opening

Notes

- Ensure that the actuator's and valve's stem, or actuator's and valve's spindle are securely connected in all positions.
- If the actuator is forced to travel beyond its end positions, overload protection responds.
- Observe information given in chapter "Acting direction and flow characteristic" on page 57.

Electrically

Before making the function check, the following preconditions must be satisfied:
- Environmental conditions specified in chapter "Technical data" (page 73).
- Actuator is mechanically connected to a Siemens valve.
- **Actuator is in "Automatic" mode** (page 69).

Actuator and, if required, accessories are correctly fitted and connected. Also refer to "Connection Terminals" (page 77)
- Power is applied.

SA..61..

Calibration is required with modulating actuators and SA..61.. before the function check.

General notes on calibration

Before making the calibration, the following preconditions must be satisfied:
- A description of the calibration function is given in chapter "Calibration" (page 59 for non-Modbus actuators, page 63 for Modbus actuators).
- Housing cover is removed (step 6 "Special notes on mounting", page 35).

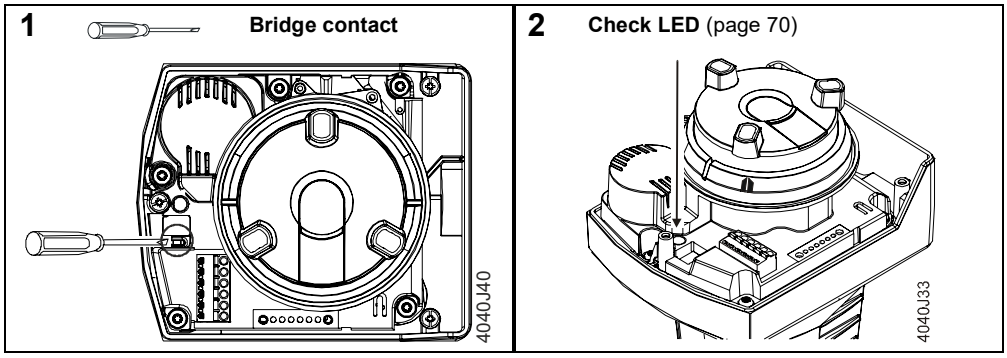

If required, calibration can be repeated any number of times.

Make the function check for modulating actuators after the calibration with a point test according to the following table:

SAX61.03/03U, SAV61.00/00U and SAL61..

Connection terminals	Stroke actuator		Rotary actuator	Control path valve A→AB	Bypass valve B → AB	Position feedback U	
	log [1]	lin [1]				log [1]	lin [1]
Y 6 V 13,6 mA	Actuator's stem extends (60%)	Actuator's stem extends (82%)	Actuator's spindle turns in clockwise direction (60 %)	Opening	Closing	6 V	8,2 V
Y 5 V 12 mA	Actuator's stem retracts (50%)	Actuator's stem retracts (75%)	Actuator's spindle turns in counterclockwise direction (50 %)	Closing	Opening	5 V	7,5 V
Z connected to G	Actuator's stem extends		Actuator's spindle turns in clockwise direction	Opening	Closing	10 V	
Z connected to G0	Actuator's stem retracts		Actuator's spindle turns in counterclockwise direction	Closing	Opening	0 V	

[1] SAX61.03.. and SAV61.00.. factory setting **log,** SAL61.. factory setting **lin**

SAY61P.., SAX61P03.., SAV61P00...

Connection terminals	Stroke actuator		Rotary actuator	Control path valve A→AB	Bypass valve B → AB	Position feedback U	
	log [1]	lin [1]				log [1]	lin [1]
Y 6 V 13,6 mA	Actuator's stem retracts (30%)	Actuator's stem retracts (60%)	-	Opening	Closing	2.95 V	6 V
Y 5 V 12 mA	Actuator's stem extends (23%)	Actuator's stem extends (50%)	-	Closing	Opening	2.3 V	5 V
Z connected to G	Actuator's stem retracts		-	Opening	Closing	10 V	
Z connected to G0	Actuator's stem extends		-	Closing	Opening	0 V	

[1] SAY61P.., SAX61P.., SAV61P.. factory setting **log**

SA..31.. and SA..81..

Make the function check for 3-position actuators according to the following table:

Connection terminals	Stroke actuator	Rotary actuator	Control path valve A→AB	Bypass valve B → AB
Voltage at Y1	Actuator's stem extends	Actuator's spindle turns in clockwise direction	Opening	Closing
Voltage at Y2	Actuator's stem retracts	Actuator's spindle turns in counter-clockwise direction	Closing	Opening
No voltage at Y1 and Y2	Actuator's stem maintains the position	Actuator's spindle maintains the position	Maintains the position	

Notes

- If function module AZX61.1 is used, observe information given in chapter "Changeover of acting direction" (page 55).
- Observe information given in chapter "Acting direction and flow characteristic" on page 57.

Auxiliary switch ASC10.51

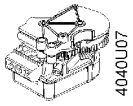

Make the function check for mounted auxiliary switches according to the following table – example switching point at 25% position:

Connection terminals		Stroke actuator	Rotary actuator	Terminal S1 – S3	Terminal S1 – S2
Voltage at Y2	Y = 0 V	Actuator's stem retracts (until end position is reached)	Actuator's spindle turns in counter-clockwise direction (until end position is reached)	-	-
No voltage at Y1 und Y2	Y = 0 V	Actuator's stem maintains the position	Actuator's spindle maintains the position		
Voltage at Y1 for desired valve position % + 2% x positioning time **Example:** SAX31.00 = 27% x 120 sec = 32.5 sec	Valve position % + 2% Y = 2.7 V	Actuator's stem extends to desired position (27%)	Actuator's spindle turns in clockwise direction to desired position (27%)		
Check switching point with voltmeter		Actuator's stem maintains the position	Actuator's spindle maintains the position	-	-

Potentiometer ASZ7.5

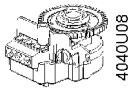

Make the function check for mounted potentiometer according to the following table (Example values for ASZ7.5):
First, observe "Notes on ASZ7.5" (page 19).

Connection terminals	Stroke actuator	Rotary actuator	Terminal P1 – P2	Terminal P2 – P3
Voltage at Y2	Actuator's stem retracts (until end position is reached)	Actuator's spindle turns in counter-clockwise direction (until end position is reached)	-	-
No voltage at Y1 und Y2	Actuator's stem maintains the position	Actuator's spindle maintains the position	< 1 Ω	> 996 Ω
Voltage at Y1 for desired valve position % positioning time **Example:** SAX31.00 = 75% x 120 sec = 90 sec	Actuator's stem extends to desired position (75%)	Actuator's spindle turns in clockwise direction to desired position (75%)	-	-
Check position value with ohmmeter	Actuator's stem maintains the position	Actuator's spindle maintains the position	~ 560 Ω	~ 436 Ω
Voltage at Y2 for desired change of valve position % x positioning time **Example:** SAX31.00 = 10% x 120 sec = 12 sec	Actuator's stem retracts to desired position (65%)	Actuator's spindle turns in counter-clockwise to desired position (65%)	-	-
Check position value with ohmmeter	Actuator's stem maintains the position	Actuator's spindle maintains the position	~ 485 Ω	~ 511 Ω

3.2.2 Commissioning Modbus RTU

The devices were developed specifically for use with Climatix push-button configuration as described in document CE1A3975 [1].
As an alternative, the bus can be configured via the local HMI; see Section **User interface**, pg. 47.
Check the following during commissioning:

- Bus configuration (address, baud rate, type of transmission and optional termination). Standard address 255 allows for installation and commissioning of several actuators simultaneously without mutual interference.
- The actuator parameters (direction for opening, position limits, position adjustment etc.) can be read via the Modbus register.

[1] Documents can be downloaded at http://www.siemens.com/bt/download

Full or partial configuration via bus

The actuators can be configured via bus connection if the settings prior to commissioning allow for a connection to the Modbus master/programming tool (no address conflicts and correct baud rates/transmission format settings).

- Full configuration via bus: With a unique Modbus address, a connection can be established from Modbus master/programming tool following startup by means of the preset transmission format and baud rate (or auto-baud).
- Partial configuration via bus: If the Modbus address is not unique, it must first be set to a unique value, either by using the address input with push button (cf. page 48) or by setting the address to 246 with push button press > 5s und < 10s (cf. page 47). Full configuration via bus: With a unique Modbus address, a connection can be established from Modbus master/programming tool following startup by means of the preset transmission format and baud rate (or auto-baud)..

With an existing connection, the bus and actuator parameters can be set to target values via the bus. During write access to the bus parameters,
"1 = Load“ must be written to register 768 within 30 seconds to ensure the changes are not discarded.

Example: The table shows the register values before and after the change via bus access.

Reg.	Name	Before change	After change
764	Modbus address	246	12
765	Baud rate	0 = auto	1 = 9600
766	Transmission format	0 = 1-8-E-1	3 = 1-8-N-2
767	Bus termination	0 = Off	0 = Off
768	Bus conf. command	0 = Ready	1 = Load

User interface

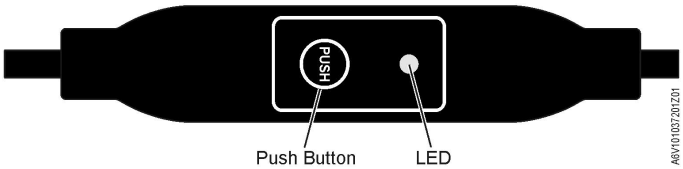

Pushbutton operation

Action	Pushbutton operation	Feedback message
Current Modbus address (starting from lowest address position)	Button pressure < 1s	1st digit: red 2nd digit: green 3rd digit: orange The LED blinks blue once after address indication and when bus termination is On Example: 124 = 4x red, 2x green, 1x orange
Switches bus termination On/Off		
Switch-on	1. Press button 3x	Blinking or flickering of LED stops (termination mode)
	2. Press button 1x briefly	Blue LED blinks once
	3. Press button until the LED turns red	RED LED is lit (confirmation)
	4. Release button	LED not lit Address is indicated LED blinks blue once following address indication Device enters normal mode
Switch-off	1. Press button 3x	Blinking or flickering of LED stops (termination mode)
	2. Press button until the LED turns red	RED LED is lit (confirmation)
	3. Release button	Device enters normal mode
Enter Modbus address using pushbutton	Press button > 1s and < 5s	See “Enter address using pushbutton”, page 48
Enable pushbutton addressing (together with Climatix™ controllers)	1. Press button > 5s and < 10s 2. Release button	Red LED is lit and goes off after 5 s Orange LED is lit
Reset to factory settings	Press button > 10s	Orange LED blinking

LED Farben und Blinkmuster

Color	Blinking pattern	Description
Green	1s On / 5s Off	Normal mode without bus traffic
	Flickering	Normal mode with bus traffic
Orange / green	1s orange / 1s green	Device is in override control mode
Orange	1s On / 1s Off	Bus parameter not yet configured
	1s On / 5s Off	Device is in backup mode
Red	Permanently lit	Mechanical error, device blocked, manual intervention or calibration
	1s On / 5s Off	Internal error
	0.1s On / 1s Off	Invalid configuration, e.g. Min = Max
Blue	Flickering once after address indication	Bus termination active

Reset actuator with pushbutton

1. Press button >10s → LED blinking **orange**
2. Release button *while* blinking → LED blinking for another 3s
3. Reset is interrupted if the pushbutton is pressed *during* the 3s
4. After 3s, → LED is lit **red** (reset) while the device restarts.

Enter address using pushbutton

The Modbus address can be set without extra tool by means of pushbutton addressing.

To display the current Modbus address, press the button <1s.

Enter new address (starting from the lowest address position)

Colors		
1st digit: **red**	2nd digit: **green**	3rd digit: **orange**
Example for address 124:		
LED	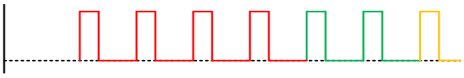	
Note	The address is entered and displayed beginning at the lowest digit (1st digit), see figure above. (Example: 124 starts with 4x red)	

Enter new address (starting from lowest address position)

1. **Enable addressing mode**: Press button > 1s until the LED is **red**, then release button (before LED goes off).
2. **Enter the numbers**: Push button n-times → LED blinks each time the button is pressed as a feedback.
   Colors: 1st digit: **red** / 2nd digit: **green** / 3rd digit: **orange**
3. **Save digits:** Press button until LED is lit in the color of the next digit, then release the button,
4. **Save address**: Press button until LED is **red** (confirmation) →, then release button.
   An address can be saved any time, i.e., after entering the 1st digit or after entering the1st digit and 2nd digit.
5. The entered address is displayed again 1x for confirmation.

Note: Address entry is interrupted when the button is released before the LED is red, address entry is interrupted.

Example

Set address "124":

1. Enable addressing mode
2. Enter the 1st digit: Press button 4x → LED blinks **red** each time the button is pressed
3. Save 1st digit: Press button until LED is **green** – release button
4. Enter the 2nd digit: Press button 2x → LED blinks **green** each time the button is pressed
5. Save 2nd digit: Press button until LED is **orange** – release button
6. Enter the 3rd digit: Press button 1x → LED blinks **orange** each time the button is pressed
7. Save address: Press button until LED is **red** – release button
   → The address is saved and displayed 1x for confirmation

Set address "50":

1. Enable addressing mode
2. Skip over 1st digit: Press button until LED is **green** – release button
3. Enter the 2nd digit: Press button 5x → LED blinks **green** each time the button is pressed
4. Save address (skip 3rd digit): Press button until LED is **red** – release button
   → The address is saved and displayed 1x for confirmation

Set address "5":

1. Enable addressing mode
2. Enter the 1st digit: Press button 5x → LED blinks **red** each time the button is pressed
   Save address: Press button until LED is **red** – release button
   → The address is saved and displayed 1x for confirmation

3.2.3 Maintenance

The actuators are maintenance-free.

3.2.4 Disposal

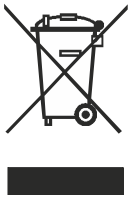	The device is considered electrical and electronic equipment for disposal in terms of the applicable European Directive and may not be disposed of as domestic garbage. • Dispose of the device through channels provided for this purpose. • Comply with all local and currently applicable laws and regulations.

4 Functions and control

4.1 3-position control

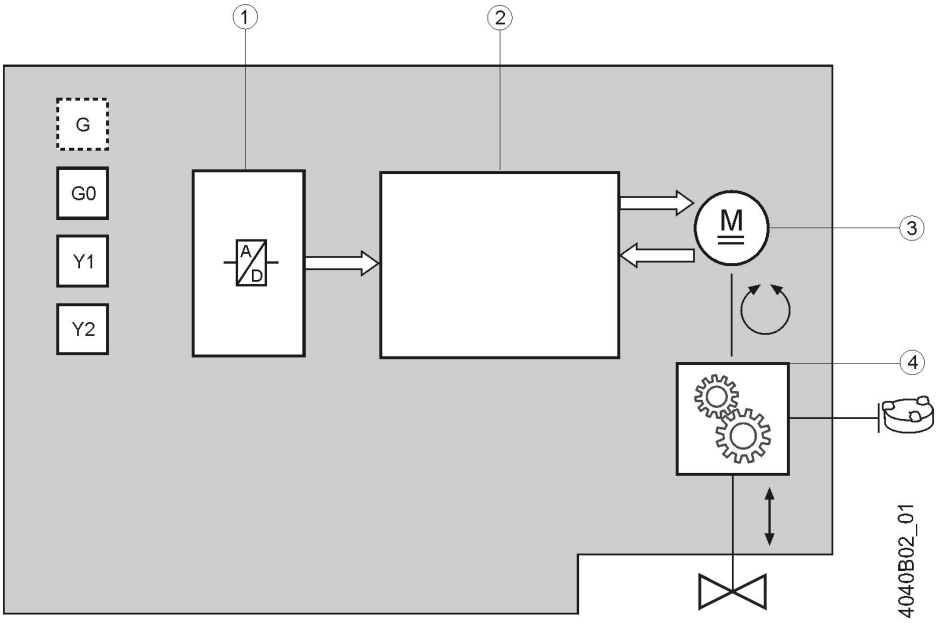

A 3-position signal drives the actuator via connection terminals Y1 or Y2. The required position is transferred to the valve.

1	A/D conversion	
2	Control functions	Identification of seat
		Control of direction
		Motor control
		Manual adjustment
3	Brushless DC motor	
4	Gear train	
	Manual adjuster	

Positioning signal	Stroke actuator	Rotary actuator	Control path valve A→AB	Bypass valve B → AB
Voltage at Y1	Actuator's stem extends	Actuator's spindle turns in clockwise direction	Opening	Closing
Voltage at Y2	Actuator's stem retracts	Actuator's spindle turns in counter-clockwise direction	Closing	Opening
No voltage at Y1 and Y2	Actuator's stem maintains the position	Actuator's spindle maintains the position	Maintains the position	
Voltage at Y1 and Y2	Actuator's stem maintains the position	Actuator's spindle maintains the position	Maintains the position	

Note

Observe information given in chapter "Acting direction and flow characteristic" on page 57.
Internal control ensures very constant positioning times and determination of the actuator's position.

Positioning times stroke model

The specified positioning times refer to the respective nominal stroke / nominal angular rotation. Since the end positions of rotary actuators are inside the actuator, the following remarks refer to stroke actuators.
The resulting effective strokes vary, depending on the type of valve, resulting in shorter or longer actuator positioning times.

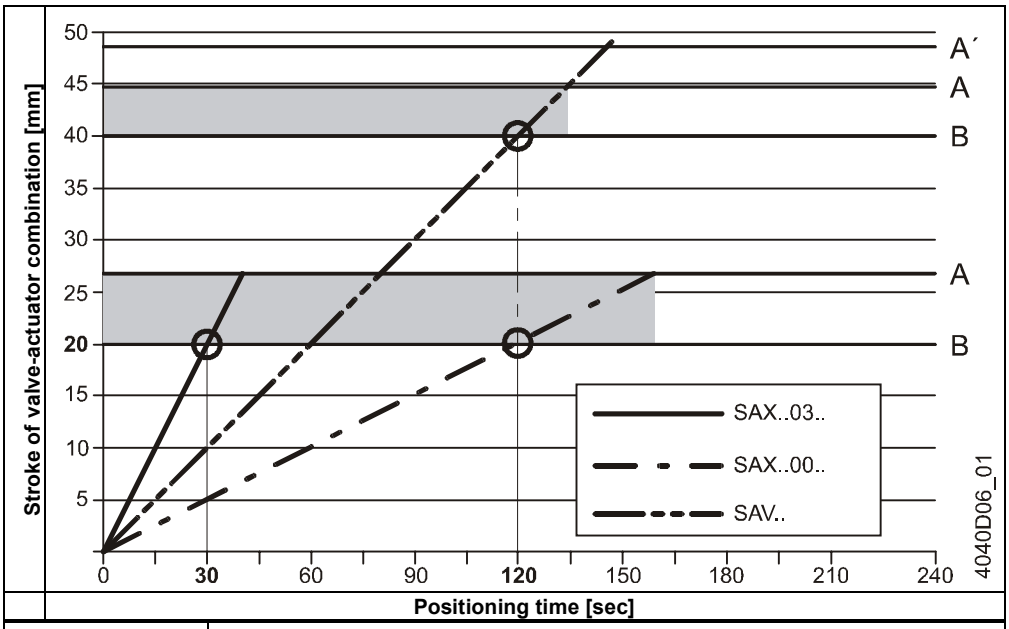

Legend diagram	
A	Mechanical end position in SAX.. / SAV..
B	VVF.. / VXF.. valves with 20 / 40 mm nominal stroke = k_{vs}- value reached
A…B	Internal end position of VVF.. / VXF.. valves with 20 / 40 mm nominal stroke

Notes

Deviations occur…

- after several positioning signals Y1 and Y2 in the same direction since the stroke movement starts with a delay of 300 ms.
- when positioning signals Y1 and Y2 are active for less than 300 ms since the stroke movement cannot be made in that case.

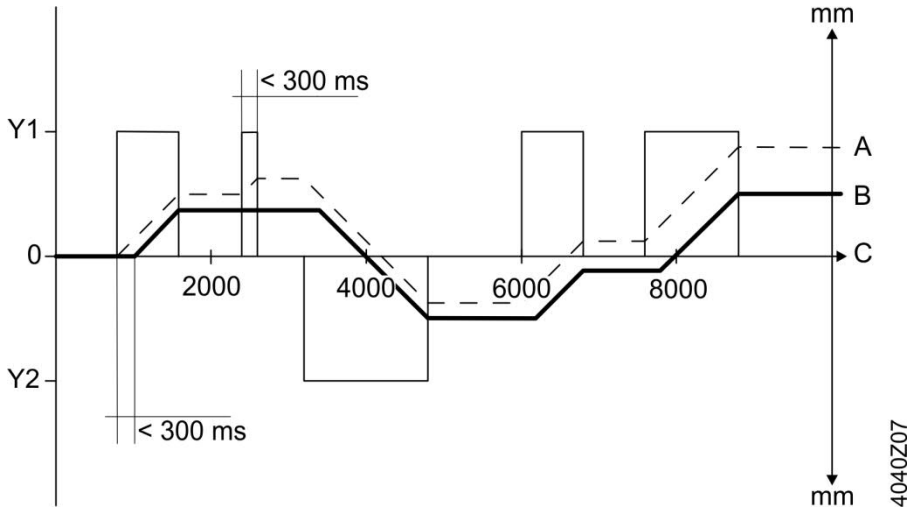

A	B	C	Y1	Y2	0
Calculated position	Actual position	Positioning time [ms]	Positioning signals (power applied)		No power applied

Accurate position feedback is made possible with the help of a potentiometer (page 71).

Notes

4.1.1 Combination with RVD.. controller for direct domestic hot water distribution by heat exchanger

The design based slow reaction on control signals of SAX31.., SAX81.., SAV31.., SAV81.., SAY31.., SAY81.., SAL31.. und SAL81.. actuators doesn't allow the actuator to react on very short control pulses. Only control pulses with a length greater than 300 ms allow a sufficient reaction.

Especially the direct domestic hot water control does not allow such long control pulses. The specific optimized control loops – equipped with an SIGMAGYR RVD.. controller and Acvatix SQS359.05 actuator– work with pulses down to 40 ms.

the actuators mentioned above are not able to work with these short pulses.
The following table gives alternatives which actuators can be used within these control loops.

Controller	Plant type	Prefered actuator	Valve line	DN	kvs
RVD130 [1)] RVD135/109 [1)] RVD135/309 [1)] RVD140 RVD144/109 RVD145/109 RVD139 [1)]	4 and 5	SQS35.53 [1)] SAS31.53 [1)]	VVG44..	DN15 ..40	0.25 .. 25
		SQS359.05 [1)] SAT31.008	VVG549..	DN15 ..25	0.25 .. 6.3
		SQS359.54 [1)] SAT31.51	VVG549..	DN15 ..25	0.25 .. 6.3
		SKD32.21	VVG41.. VVF53..	DN15 ..50	0.63 .. 40 0.16 .. 40
		SKD32.21E		DN15 ..50	0.63 .. 40 0.16 .. 40
RVD230 [1)] RVD235/109 [1)] RVD250 RVD255/109 RVD240 [1)] RVD245/109 [1)] RVD260 RVD265/109	.. - 4	SQS35.53 [1)] SAS31.53	VVG44..	DN15 ..40	0.25 .. 25
		SQS359.05 [1)] SAT31.008	VVG549..	DN15 ..25	0.25 .. 6.3
		SQS359.54 [1)] SAT31.51	VVG549..	DN15 ..25	0.25 .. 6.3
		SKD32.21	VVG41.. VVF53..	DN15 ..50	0.63 .. 40 0.16 .. 40
		SKD32.21E	VVG41.. VVF53..	DN15 ..50	0.63 .. 40 0.16 .. 40

[1)] not available

4.2 Modulating control

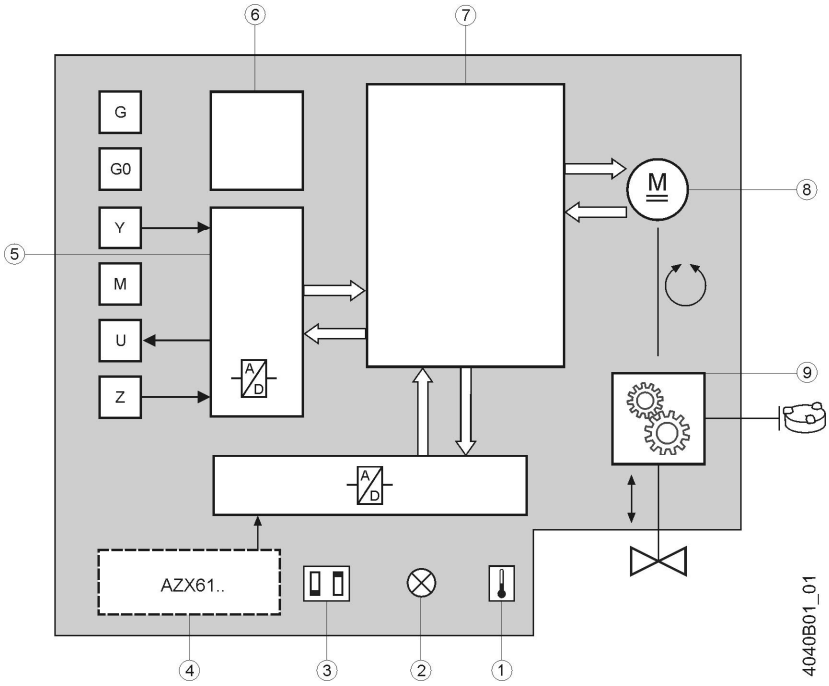

The modulating positioning signal drives the actuator steplessly. The positioning signal range (DC 0...10 V / DC 4...20 mA, 0...1000 Ω) corresponds in a linear manner to the positioning range (fully closed...fully open, or 0…100 % stroke).

The actuator is driven via connection terminal Y or forced control Z (page 62). The required stroke / rotation is transferred to the valve's stem / spindle.

1	Calibration slot	
2	LED (2 colors)	
3	DIL switches	Changeover of characteristic
		Positioning signal
4	Function module	
5	A/D conversion	
6	Power supply	
7	Control functions	Identification of seat
		Position control
		Motor control
		Detection of foreign bodies
		Calibration
		Forced control
		Characteristics function
		Manual adjustment
8	Brushless DC motor	
9	Gear train	
	Manual adjuster	

Positioning signal	Stroke actuator	Rotary actuator	Control path valve A→AB	Bypass valve B → AB
Signal Y, Z increasing	Actuator's stem extends	Actuator's spindle turns in clockwise direction	Opening	Closing
Signal Y, Z decreasing	Actuator's stem retracts	Actuator's spindle turns in counterclockwise direction	Closing	Opening
Signal Y, Z constant	Actuator's stem maintains the position	Actuator's spindle maintains the position	Maintains the position	

Notes

- If function module AZX61.1 is used, observe the information given in chapter "Changeover of acting direction" (page 55).
- Observe the information given in chapter "Acting direction and flow characteristic" on page 57.

4.3 Function module AZX61.1

DIL switches

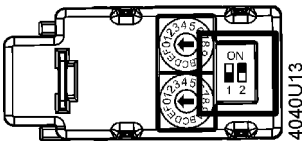

	Acting direction	Sequence control
OFF [1]	ON 1 2 4040Z10 Direct acting positioning signal Y or Z	ON 1 2 4040Z12 Sequence control **not** active
ON [1]	ON 1 2 4040Z09 Reverse acting positioning signal Y or Z	ON 1 2 4040Z11 Sequence control (signal adaptation)

[1] Factory setting: All switches set to OFF

The function module may not be used in combination with SA..61../MO.

4.3.1 Sequence control (signal adaptation)

DIL switches

	Sequence control
ON [1]	ON 1 2 4040Z11 Sequence control (signal adaptation)

[1] Factory setting: All switches set to OFF

HEX switches

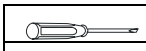

Nr.: 1

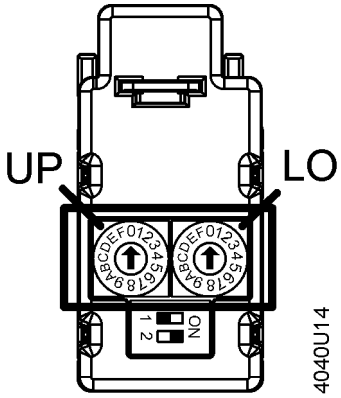

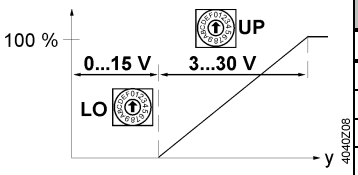

Setting sequence control

Rotary switches LO and UP are used to set the starting point or working range of a sequence.

Position "LO"	Starting point	Position "UP"	Working range
0	0,3 V	0	9,4 V
1	1 V	1	3 V
2	2 V	2	4 V
3	3 V	3	5 V
4	4 V	4	6 V
5	5 V	5	7 V
6	6 V	6	8 V
7	7 V	7	9 V
8	8 V	8	10 V
9	9 V	9	12 V
A	10 V	A	14 V
B	11 V	B	16 V
C	12 V	C	18 V
D	13 V	D	20 V
E	14 V	E	25 V
F	15 V	F	30 V

Invalid HEX switches combinations

LO	0	1	2	3	4	5	6	7	8	9	A	B	C	D	E	F
UP		F	F	F	F	F	F	F	F	F	F	D	D	C	C	B
UP							E	E	E	E	E	E	E	D	D	C
UP												F	F	E	E	D
UP														F	F	E
UP																F

Notes

- Can only be used with voltage input.
- Maximum input voltage is DC 30 V. If the configuration is invalid, the actuator operates on DC 0…10 V.

Examples

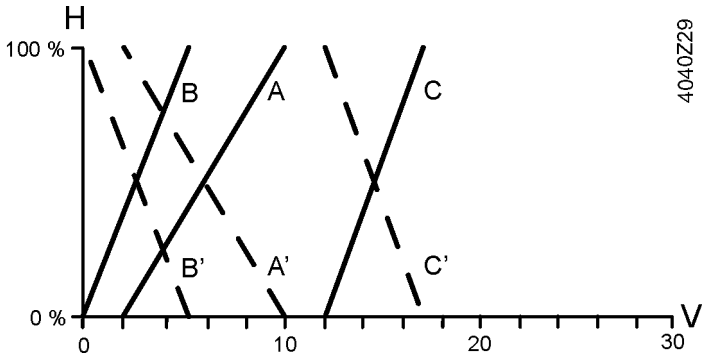

Legend diagram	Positioning signal range	Position LO	Position UP	Position feedback U
A	DC 2…10 V	2	6	DC 0…10 V
B	DC 0…5 V	0	3	DC 0…10 V
C	DC 12…17 V	C	3	DC 0…10 V
H	Stroke or rotary angle			
———	Acting direction: Direct (A, B, C)			
— — —	Acting direction: Reverse (A', B', C')			

4.3.2 Changeover of acting direction

DIL switches

Acting direction			
OFF [1]	Direct acting positioning signal Y or Z	**ON** [1]	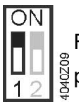 Reverse acting positioning signal Y or Z

[1] Factory setting: All switches set to OFF

Selecting the acting direction

- With valves whose stem is extended in the fully closed position, "direct acting" means that the actuator's stem is retracted when positioning signal Y = 0 V resp. Z = 0 Ω. This applies to all Siemens valves according to "Equipment combinations" (page 14).
- With valves whose stem is retracted in the fully closed position, "direct acting" means that the actuator's stem is extended when positioning signal Y = 0 V resp. Z = 0 Ω.

SAX61.03
SAV61.00

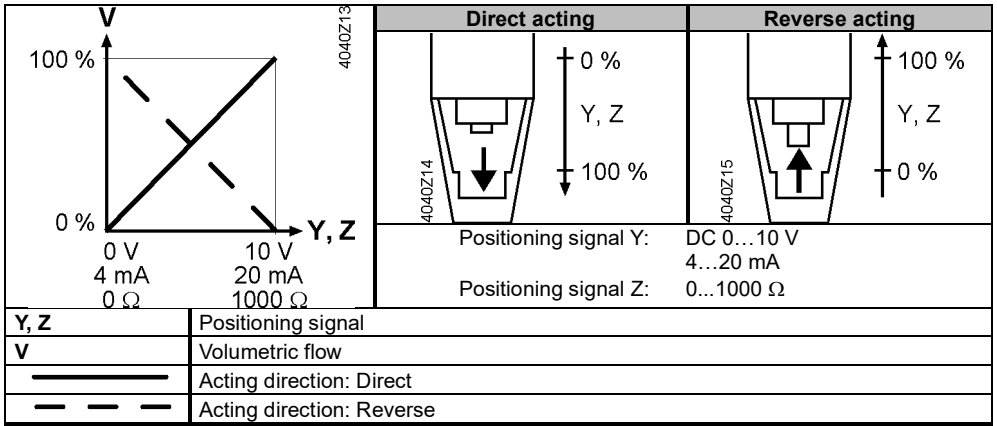

SAY61P03
SAX61P03
SAV61P00

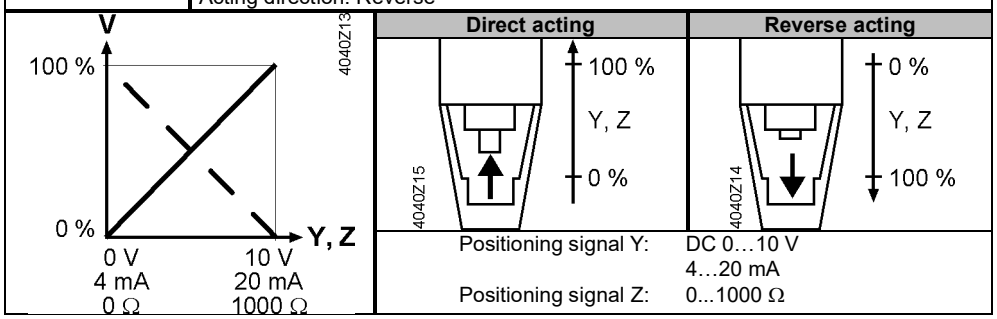

4.4 Positioning signal and flow characteristic selection

DIL switches

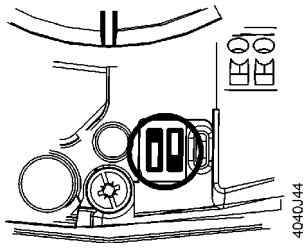

	Positioning signal "Y"		Position feedback "U"	Flow characteristic		
OFF [1]	ON 1 2 4040Z10	DC 0…10 V	DC 0…10 V	ON 1 2 4040Z12	log = equal-percentage	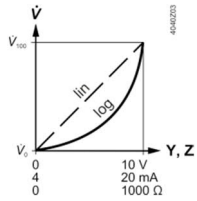
ON	ON 1 2 4040Z09	DC 4…20 mA	DC 0…10 V	ON 1 2 4040Z11	lin = linear	

[1] Factory setting: All DIL switches set to OFF Ω

Flow characteristic SAX61.03 / SAV61.00 with VVF..

	Actuator	Valve VVF.. / VVG41..	Totally
log	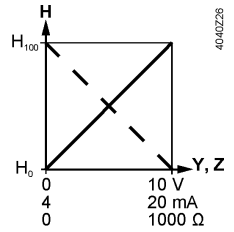	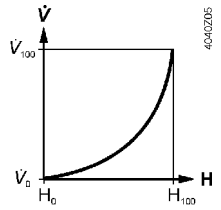	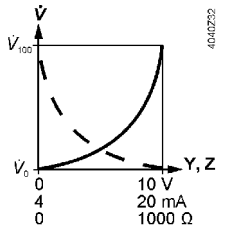
lin	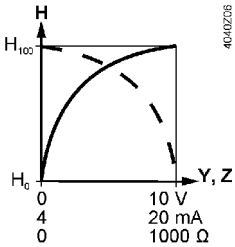	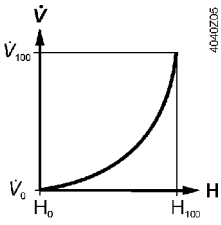	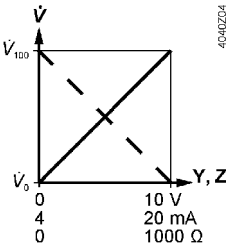

Flow characteristic SAY61P03 / SAX61P03 / SAV61P00 with VPF..

	Actuator	Combi-Valve VPF43/VPF53	Totally
log	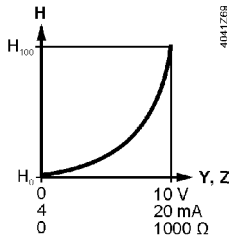	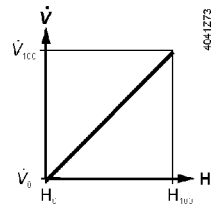	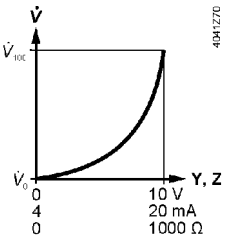
lin	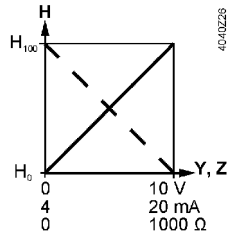	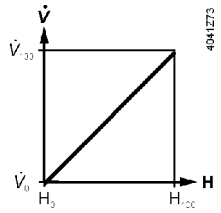	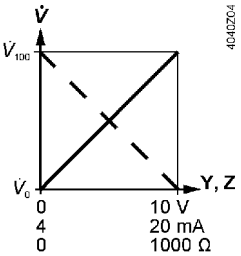

Y, Z	Positioning signal
H	Stroke
V	Volumetric flow
———	Acting direction: Direct
— — —	Acting direction: Reverse

Note

SAX61.03/MO: Positioning signal and flow characteristic selection are not permissible

4.5 Acting direction and flow characteristic

The selection of changeover of acting direction and characteristic with the DIL switches of the function module AZX61.1 depends on the type of actuator (with or without fail safe function) and the associated type of valve (valve characteristic, push to open, pull to open).

When the positioning signal increases (DC 0…10 V, DC 4…20 mA, 0...1000 Ω), the objective is to have the valve's volumetric flow V rising, but to fully open the valve, V = 100 % (NO = normally open), or to fully close it, V = 0 % (NC = normally closed) in the event of a power failure.

			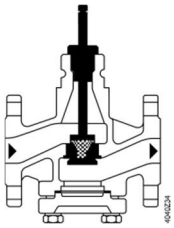		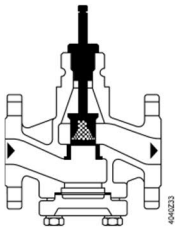	
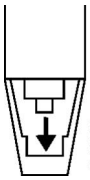 4040Z35	**DIL switches**	**Acting direction**	Direct		Reverse	
		Flow characteristic	Linear	Equal-percentage	Linear	Equal-percentage
	Without fail safe function	**No power applied**	Maintains the position			

4.6 Position Feedback U

The position feedback U (DC 0...10 V) is always proportional to stroke H of the actuator's stem.

		Actuator Positioning signal Y, Z	**Actuator Position feedback U**
4040Z12	log = equal-percentage	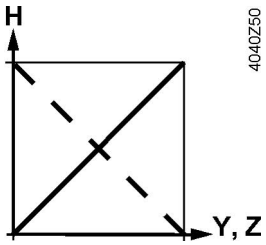	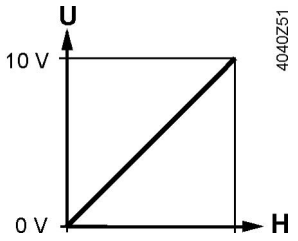
4040Z11	lin = linear	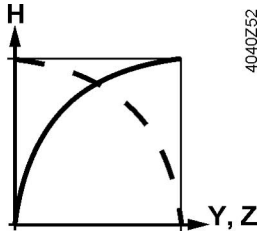	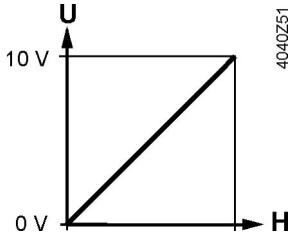

	Actuator Positioning signal Y, Z	Actuator Position feedback U
Direct acting	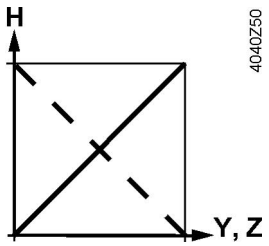	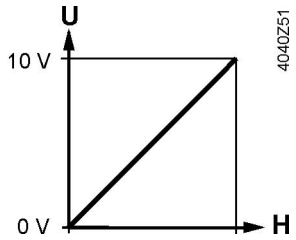
Reverse acting	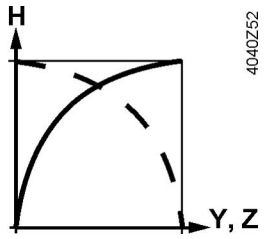	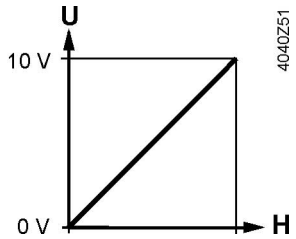
Y, Z	Positioning signal	
H	Stroke	
U	Position feedback	
———	Acting direction: direct	
— — —	Acting direction: reverse	

4.7 Position control with ClosedPosition-Synchronization

Within SAX/SAV/SAL61/SAY61.. actuators the position control works based on the HALL-sensor pulses from the brushless DC-motor calculating with an internal stroke model calculating the actual position. This kind of control is more accurate and wearless compared with a physical element for position measurement and grants a precise position control with high resolution.

During manual operation the motor is declutched from the gear train and the internal position control get’s not sensor pulses. So real position will deviate from the internally calculated position. As a consequence the position feedback on terminal U is set to “0V” during manual operation.

To grant – after manual operation – that real mechanical position and internal position control are matching all SA..61.. operate after manual operation an automatic ClosedPosition-Synchronization.

4.7.1 ClosedPosition-Synchronization

Returned into automatic operation the actuator runs for 0.5.. 2 s into opening direction to grant secure closed-position detection. Then the actuator runs into closed position (seat A-AB in the valve). Reaching the closed position the internal stroke model is synchronized. Positioning signal, position feedback and mechanical position now match perfectly again.
With this function it’s granted that the position feedback U – which was zero during manual operation and synchronization - always represents the real mechanical position of the actuator.

After synchronization the actuator follows the control signal again.

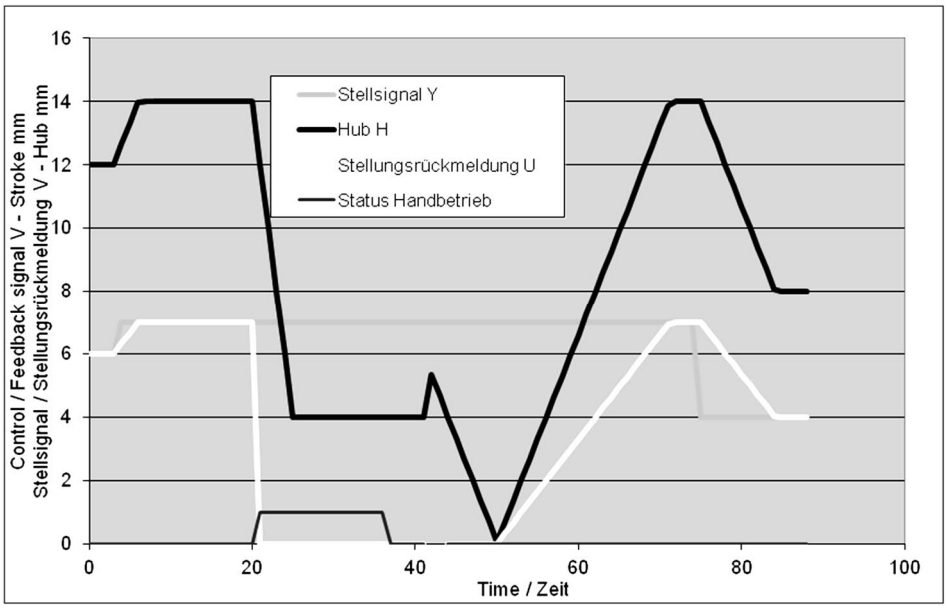

4.7.1.1 Active forced position input on Z

If after return to automatic mode a signal on Z is active (GND, AC/DC 24 V or 0…1000 Ohm) the ClosedPosition-Synchronization is deactivated as long as the signal on Z remains.
After Z is deactivated the ClosedPosition-Synchronization will be performed.

Note

ClosedPosition-Synchronization is only automatically activated after manual operation. A power failure does not activate this function automatically, to avoid that all actuators in a section close in parallel.

If the customer likes synchronization also after a power failure he should take care that the plant restarting routine drives the actuator automatically into an end position. This will also synchronize the internal position control and the real position.

4.8 Calibration

To match the actuator to production-related mechanical tolerances of the individual valves, accurate positioning and position feedback must be ensured, if calibration is performed when the plant is commissioned (page 43). During commissioning, the actuator detects the valve's end positions and files the exact stroke in its internal memory.

Calibration takes place in the following phases:

- Actuator drives to H_0 (1), valve closes. Detection of upper end position.
- Actuator drives to H_{100} (2), valve opens. Detection of lower end position.
- The detected values are stored (3). Then the actuator follows the positioning signal.

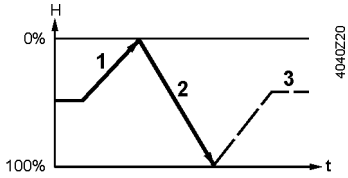

Note

- Observe status indication (actuator LED) during and after calibration (page 70).
- If the actuator does not detect the second end position within an appropriate stroke range (SAX.., SAY.. max. 25 mm; SAV.. max. 45 mm), the first end stop will be adopted and the actuator operates with a working range of 20 mm, respectively 40 mm.

4.9 Signal priorities

The actuators are controlled via different interlinked positioning signal paths (positioning signal “Y“, forced control input “Z“, manual adjuster). The signal paths are assigned the following priorities:

Priority	Description	
1 (highest)	The manual adjuster always has priority 1, thus overriding all signals active at “Z“ or “Y“, independent of whether or not power is applied.	
2	Only SA..61..: As soon as a valid positioning signal is active at input “Z“, the position is determined via positioning signal “Z“ (forced control). Prerequisite: The manual adjuster is not used.	**Z**
3 (lowest)	The position is determined via positioning signal ”Y”. The manual adjuster is not used and on Z there is no active signal.	**Y**

Examples

Manual adjuster	Forced control (Z)	Positioning signal (Y)	Stroke actuator	Rotary actuator
Automatic mode	Not connected	**5 V**	Actuator’s stem travels to position (50%)	Actuator’s spindle travels to position (50%)
Automatic mode	**G**	3 V	Actuator’s stem extends	Actuator’s spindle turns in clockwise direction
Automatic mode	**G0**	3 V	Actuator’s stem retracts	Actuator’s spindle turns in counter-clockwise direction
Operated (30%) and engaged	G	8 V	Actuator’s stem retracts manual (to 30%)	Actuator’s spindle turns manual in counterclock-wise direction (to 30%)

Bold printing = positioning signal currently active

4.10 Detection of valve seat

The actuators feature force-dependent valve seat detection. After calibration, the exact valve stroke is filed in the actuator’s memory. When the actuator reaches the respective end of stroke, it does not hit the valve’s seat at full speed, but stops for 5 seconds at about 1% before the stored position is reached. If the positioning signal stays at 0% or 100%, the actuator travels to the calculated end position at reduced positioning speed and builds up the required nominal force.
This function extends the actuator’s service life since the dynamic forces are reduced when approaching the valve seat and there will be less strain on the gear train.
In addition, the actuator’s oscillations in the case of instable control are suppressed.
If no force is built up in the calculated end position (e.g. in the event of temperature effects for instance), the actuator continues to operate at a reduced positioning speed until the nominal positioning force is restored. This ensures that the valve always fully closes.
After a power failure, valve seat identification is not active – the actuators define their stroke position on power resoration to be at 50%. From now on, the actuator follows the positioning signal.
When the valve plug reaches its seat for the first time, the actuator readjusts its stroke model.

Example

The supposed position is 50%, Y = 2 V, the actuator travels 30% of the stored valve stroke in the direction of "Actuator's stem retracted".
If the actuator reaches the seat within this 30% travel, it interprets the position as "Valve fully closed" and shifts the position of the valve's stroke accordingly without changing the extent of travel.
From now on, the actuator follows the changed valve stroke position.
This means: New position 0%, Y = 2 V, actuator travels 20% of the stored valve stroke in the direction "Actuator's stem extended".

4.11 Detection of foreign bodies

The actuator detects when the valve is clogged and adjusts its operational behavior accordingly to prevent damage to itself or the valve.
If the actuator hits an obstacle within the calibrated stroke and is not able to overcome it with its nominal positioning force, it stores the position at which the obstacle was hit. Depending on the direction of travel, as …

• "Lower limit of valve clogging", if the clogging was detected when traveling in the direction of "Actuator's stem retracting".	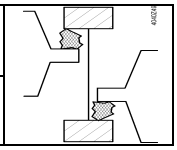
• "Upper limit of valve clogging", if the clogging was detected when traveling in the direction of "Actuator's stem extending".	

Now, the actuator status LED blinks green and the actuator only follows the positioning signal between the positions "Actuator's stem retracted" and "Upper limit of valve clogging" or "Actuator's stem extended" and "Lower limit of valve clogging".
After detection of clogging, 3 attempts are made to overcome clogging by traveling about 15% in the opposite direction and then trying again to overcome the position of clogging. If the attempts made are unsuccessful, the actuator continues to follow the positioning signal within the restricted range only and the actuator LED continues to blink green (refer to "Indicators" on page 70).

4.12 Forced control Z

SA..61.. only

Forced control is affected by changeover of acting direction. It uses the following operating modes:

	Z-mode			
	No function	Fully open	Fully closed	Overriding positioning signal “Y“ by 0…1000 Ω
Connections		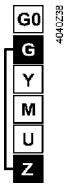	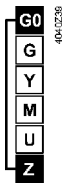	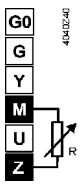
Transmission	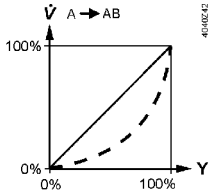	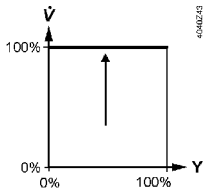	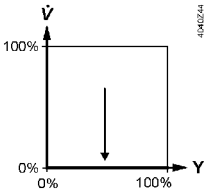	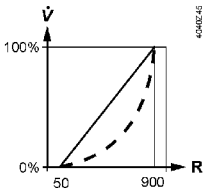
	Equal-percentage or linear characteristic			Equal-percentage or linear characteristic
	Contact “Z“ not connected, valve follows positioning signal ”Y”	Contact “Z“ is connected directly to “G“, positiong signal ”Y” has no impact	Contact “Z“ is connected directly to “G0“, positiong signal ”Y” has no impact	Contact “Z“ is connected to “M“ via resistor “R“, starting point at 50 Ω, end point at 900 Ω, positioning signal ”Y” has no impact

Note

The operating modes "Z" shown are based on factory setting "direct acting" and a "push to open" valve.

4.13 Communicating actuators Modbus RTU

4.13.1 Detection of valve seat

The actuators feature force-dependent valve seat detection. After calibration, the exact valve stroke is filed in the actuator’s memory. When the actuator reaches the respective end of stroke, it does not hit the valve’s seat at full speed, but stops for 5 seconds at about 1% before the stored position is reached. If the positioning signal stays at 0% or 100%, the actuator travels to the calculated end position at reduced positioning speed and builds up the required nominal force.

This function extends the actuator’s service life since the dynamic forces are reduced when approaching the valve seat and there will be less strain on the gear train.

In addition, the actuator’s oscillations in the case of instable control are suppressed.

If no force is built up in the calculated end position (e.g. in the event of temperature effects for instance), the actuator continues to operate at a reduced positioning speed until the nominal positioning force is restored. This ensures that the valve always fully closes.

After a power failure, valve seat identification is not active – the actuators without fail safe function define their stroke position upon return of power at 50% and automatically set their internal setpoint in register 1 to the startup setpoint (register 516). The actuator closes at this setting. There is a short-term deviation between the setpoint and the internal stroke position.

When the valve plug reaches each seat for the first time, the actuator readjusts its stroke mode.

Example

Setpoint prior to power outage 35%, no manual adjustment during the power outage. Internal stroke position value after return of power 50%. Internal setpoint after return of power equal to startup setpoint (register 516, here 0%). The actuator moves 35% in the direction of "Retract actuator stem" and reaches the valve seat (if the setpoint has not been changed in the meantime). The internal stroke position is set to 0%.

The actuator now follows the changed valve stroke position effective immediately.

4.13.2 Detection of foreign bodies

The actuator detects when the valve is clogged and adjusts its operational behavior accordingly to prevent damage to itself or the valve.
If the actuator hits an obstacle within the calibrated stroke and is not able to overcome it with its nominal positioning force, it stores the position at which the obstacle was hit. Depending on the direction of travel, as …

• "Lower limit of valve clogging", if the clogging was detected when traveling in the direction of "Actuator's stem retracting".	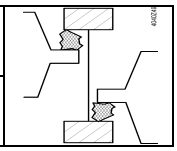
• "Upper limit of valve clogging", if the clogging was detected when traveling in the direction of "Actuator's stem extending".	

Now, the actuator status LED blinks green and the actuator only follows the positioning signal between the positions "Actuator's stem retracted" and "Upper limit of valve clogging" or "Actuator's stem extended" and "Lower limit of valve clogging".

After detection of clogging, 3 attempts are made to overcome clogging by traveling about 15% in the opposite direction and then trying again to overcome the position of clogging. If the attempts made are unsuccessful, the actuator continues to follow the positioning signal within the restricted range only and the actuator LED continues to blink green (refer to "Indicators" on page 70).

As long as the external setpoint is greater than the position of the high limit valve clogging, the deviation between the setpoint and position feedback in register 769 is displayed with the warning "Mechanical error, device blocked, manual intervention or calibration." The LED on the cable adapter is red. The warning is reset if the external setpoint drops below the high limit valve clogging, since the setpoint and stroke position are once again the same. The LED on the cable adapter switches to green blinking (=communication).

4.13.3 Calibration

To match the actuator to production-related mechanical tolerances of the individual valves, accurate positioning and position feedback must be ensured, if calibration is performed when the plant is commissioned (page 43). During commissioning, the actuator detects the valve's end positions and files the exact stroke in its internal memory.

Calibration takes place in the following phases:

- Actuator drives to H_0 (1), valve closes. Detection of upper end position.
- Actuator drives to H_{100} (2), valve opens. Detection of lower end position.
- The detected values are stored (3). Then the actuator follows the positioning signal.
- If the actuator does not detect the second end position within an appropriate stroke range (max. 25 mm), the first end stop will be adopted and the actuator operates with a working range of 20 mm.

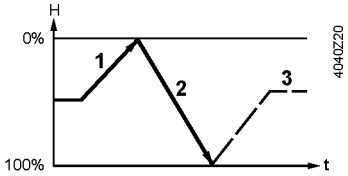

The internal position feedback is set to 0% during calibration. For a setpoint > 0%, the actuator detects calibration based on the deviation between setpoint and stroke position and reports this in Register 769 with the warning “Mechanical error, device blocked, manual intervention or calibration”. The LED on the actuator cover blinks green, the LED on the cable adapter is red.

After calibration is completed, the actuator follows the external setpoint, the warning is reset, the LED on the cover changes to continuous green and the cable adapter blinks green (communication active).

Note

Observe status indication (LED) during and after calibration (page 70).
The calibration cannot be started via the bus.

4.13.4 Manual adjustment

The actuator’s internal stroke position measurement is inactive during manual adjustment.

The position feedback changes to 0% once the manual adjuster is pressed and remains on the value during manual adjustment. The actuator detects manual action based on the deviation between the setpoint and the stroke position and after 10 seconds reports in register 769 with the warning “Mechanical error, device blocked, manual intervention or calibration”. The LED on the actuator cover blinks green, the LED on the cable adapter is red.

Upon return to automatic mode, the actuator synchronizes to stroke position 0%. After the synchronization, the actuator follows the pending setpoint, the LED on the cover changes to continuous green and, on the cable adapter, blinking green (communication active). The warning in register 769 is reset.

4.13.5 Modbus Registers

Reg.	Name	R/W	Range / listing	Factory setting
Process values				
1	Setpoint	RW	0…100% = 0…10000	-
2	Forced control	RW	0 = Off / 1 = Extend / 2 = Retract / 3 = Stop	
3	Actual value	R	0…100% = 0…10000	
256	Command	RW	0 = Ready or calibration in progress / 1 = Not available / 2 = Self test / 3 = Reinitialize / 4 = Remote reset	

Parameters				
259	Op mode	R	1 = POS	-
260	MinPosition	R	0…100% = 0…10000	0%
261	MaxPosition	R	0…100% = 0…10000	100%
262	Actuator runtime	R	30s	30s
263	Positioning signal characteristic between Y and U	R	0 = Linear (e.g. SAX61../MO + V_G41) 1 = Logarithmic (e.g. SAS61../MO + V_G44)	-
264	Tolerance blockade monitoring	R	0…100% = 0…10000	4%
513	Backup mode	RW	0 = Move to backup position 1 = Maintain last position / 2 = Disabled	2 = Disabled
514	Backup position	RW	0…100% = 0…10000	0%
515	Backup timeout	RW	60…900s	900s
516	Startup setpoint	RW	0…100% = 0…10000	0%
764	Modbus address	RW	1…248 / 255 = “unassigned”	255 = “unassigned”
765	Baud rate	RW	0 = auto / 1 = 9600 / 2 = 19200 / 3 = 38400 / 4 = 57600 / 5 = 76800 / 6 = 115200	0
766	Transmission format	RW	0 = 1-8-E-1 / 1 = 1-8-O-1 / 2 = 1-8-N-1 / 3 = 1-8-N-2	0
767	Bus termination	RW	0 = Off / 1 = On 120 Ω electronically switchable	0
768	Bus config. command	RW	0 = Ready / 1 = Load / 2 = Reject	0
769	Status	R	See “Function description”, section, “Register 769 “Status”“, page 68	-

Reg.	Name	R/W	Value	Example
Device information				
1281	Factory Index	R	Two bytes, each coding an ASCII char.	5A 00 → “Z” 00 Device is of Series “Z”
1282	Factory Date HWord	R	Two bytes, the lower coding the Year (hex)	Read 1282 → 000F Read 1283 → 0418
1283	Factory Date LWord	R	High byte: coding the month (hex) Low byte: coding the day (hex)	

	HWord		LWord	
	--	YY	MM	DD
Hex	00	0F	04	18
Dec	00	15	04	24

→ Device was manufactured 24 April, 2015

1284	Factory SeqNo HWord	R	Hword + LWord = HEX-representation of Sequence number:	Read 1284 → 000A Read 1285 → A206 AA206(hex) → 696838 (dec) → Device has sequence number 696838
1285	Factory SeqNo LWord	R		
1409	ASN [Char_16..15]	R	Each register: Two bytes, each coding an ASCII char. ASN is coded beginning with reg. 1409	Example: 0x47 44 = GD 0x42 31 = B1 0x38 31 = 81 0x2E 31 = .1 0x45 2F = E/ 0x4D 4F= MO → ASN is GDB181.1E/MO
1410	ASN [Char_14..13]	R		
1411	ASN [Char_12..11]	R		
1412	ASN [Char_10..9]	R		
1413	ASN [Char_8..7]	R		
1414	ASN [Char_6..5]	R		
1415	ASN [Char_4..3]	R		Reserve
1416	ASN [Char_2..1]	R		

Communication properties

Communication		
Communications protocol	Modbus RTU	RS-485, not galvanically separated
	Number of nodes	Max. 32
	Address range	1...248 / 255 Factory settings: 255
	Transmission formats	1-8-E-1 / 1-8-O-1 / 1-8-N-1 / 1-8-N-2 Factory settings: 1-8-E-1
	Baud rates (kBaud)	Auto / 9,6 / 19,2 / 38,4 / 57,6 / 76,8 / 115,2 Factory settings: Auto
	Bus termination	120 Ω electronically switchable Factory settings: Off

Supported function codes

Function codes	
03 (0x03)	Read Holding Registers
04 (0x04)	Read Input Registers
06 (0x06)	Write Single Register
16 (0x10)	Write Multiple Registers (Limitation: Max. 120 registers on one write access)

4.13.6 Function description

Register 1 / 3 "Setpoint / actual value"

The setpoint of the controller for the position to move to, 0…100% stroke/angle of rotation, resolution 0.01, i.e. 0% = 0 and 100% = 10000.
The actual value reported by the device, with the same resolution.

Register 2 "Override control"

The actuator can be operated in override control for commissioning / maintenance purposes or system-wide functions (e.g. night-cooling).

- Manual override: When the manual adjuster is used, a mechanical jam will be detected if a mismatch between setpoint and actual position persists for more than 10s.
- Remote override: The actuator enters this state when an override command is sent over the bus.
- Available commands:
  - Extend / Retract
  - Stop (with braking distance compensation)

Register 256 "Restarting the device"

Restarting is possible by:

- Power-reset (turning operating voltage off and on) or
- "Reinitialize" command.

→ Device re-initializes and sets all process values except actual value (= 50%) and setpoint (= startup setpoint) to defaults.

Register 256 "Self test"

When triggered, the self test drives the actuator to the detected limits and sets the flags in register 769 according to the result (bit 09 = 1→"failed" or bit 10 = 1 → "passed").
The self test is not passed when the limits were not reached from the lower end (results in jam). If the Min/Max limits can be exceeded, the self test is not evaluated as failed.

Notes

- The self test can only be performed if bit 4 = 0 in register 769 "Status", meaning there is concurrently no clogging or manual operation.

- If clogging/a blockade occurs during the self test, the test is failed, even if the device clears it within 3 tries.

Register 256
“Reset”

The actuator supports the following re-initialization / reset behaviour:

- Local reset by push-button
- Remote reset: Using “Remote-Reset” command.

Effect of reset:

- Process values except actual value and setpoint: set to ex-works default values.
- Network parameters (register 513…516 and 764…768) are reset only in case of local reset, not by remote reset (otherwise loss of communication).
- Not reset are: Counters, device info, and factory data.

Register 259
“Operating mode”

Read value only, set to „Position control“ for valve actuators.

Register 260 / 261
“Minimum and maximum position”

Electronic positioning limitation

Register 262
“Actuator runtime”

Read value only, positioning time from one stop to another.

Register 263
“Positioning signal characteristic betw. Y and U”

Depending on the valve type, this function can be used to compensate a logarithmic characteristic, in order to achieve a linear input/output signal relation (cf. “Parameter” table, page 65).

Register 264
“Tolerance blockade monitoring”

If the setpoint does not reach the tolerance limit set within this parameter, bit 4 is set in register 769 “Status” and can be used for alarming in the building automation system.

Register 513…515
“Backup mode”

In case the communication to the controller is lost, the device can be configured to go into a defined state.

- Waiting time to recognize communication loss → Register 515
- Reaction:
  - Go to a predefined backup position → Register 514
  - Deactivated (factory setting): “keep last setpoint”, i.e. in case of communication loss, the device controls to the last received setpoint, until a new valid setpoint is received.

Register 516
“Startup setpoint”

In this parameter a setpoint can be defined, which the actuator moves to at first commissioning or after a power reset, before receiving a new valid setpoint.

Register 764…766
“Modbus configuration”

Configuring the RS-485 address and transmission parameters

Register 767
“Bus termination”

Electronically switchable 120 Ω resistance for bus termination

Register 768
“Bus config. Command”

If the parameters in registers 764…766 „Modbus configuration“ are changed via bus, they are only saved if the function “Load” is called within 60 seconds in this register. Otherwise, all changes are discarded.

Register 769 “Status”

Status			
Bit 00	1 = Not available	Bit 06	1 = Not available
Bit 01	1 = Backup mode active	Bit 07	1 = Not available
Bit 02	1 = Not available	Bit 08	1 = Not available
Bit 03	1 = Not available	Bit 09	1 = Self test failed
Bit 04	1 = Mechanical error, device blocked, manual intervention[1)] or calibration[1)]	Bit 10	1 = Self test successful
Bit 05	1 = Not available	Bit 11	1 = Not available

[1)] After 10 seconds

4.14 Technical and mechanical design

4.14.1 Transmission of power

Function principle

Incoming positioning signals are translated to positioning commands for the motor.

A gear train transmits the motor’s positioning steps to the output stage (valve coupling). Attached to the gear train are the electrical and mechanical accessory items and the manual adjuster.

In the case of the rotary actuators, the adjustment to the required torque is made in the output stage. With the stroke actuators, the translation from rotary to stroke movement takes place in the output stage.

SAL..

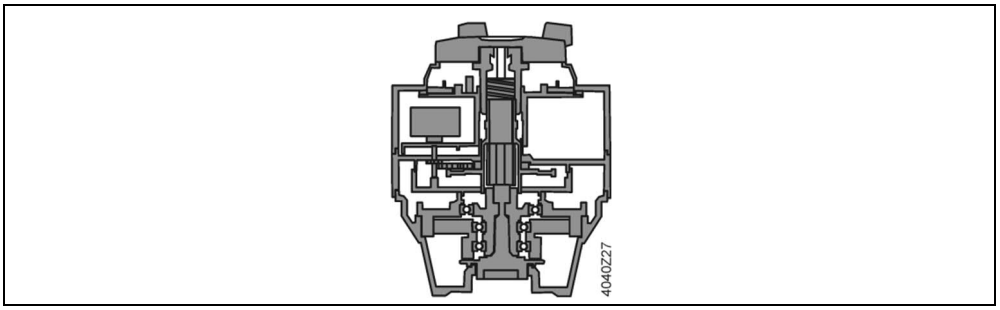

SAX.., SAV..

Actuator’s stem retracted / valve fully closed	Actuator’s stem extended / valve fully open
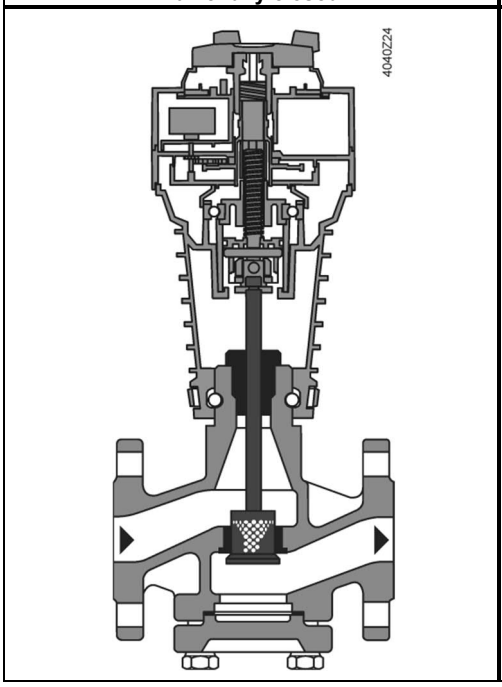	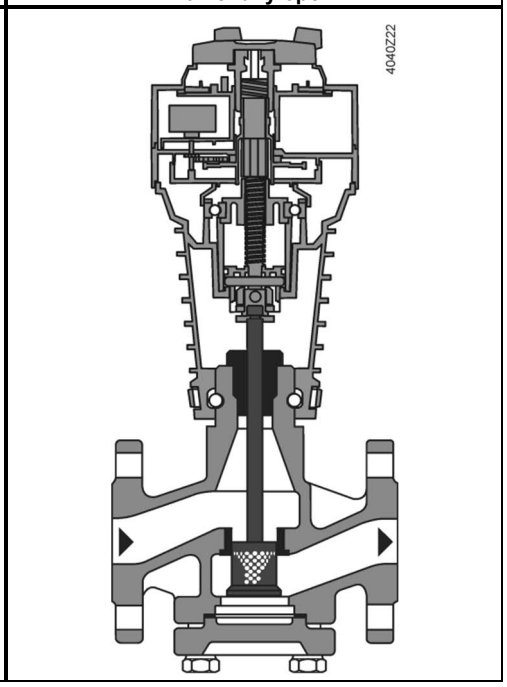

4.14.2 Coupling

SAX.., SAV..	SAL..
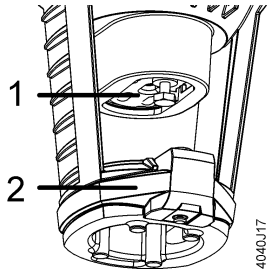	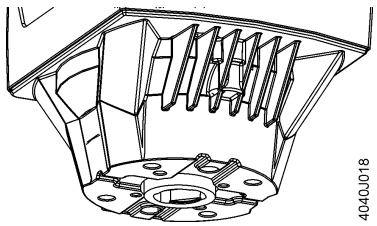
The stem coupling (1) and neck coupling (2) ensures full backward compatibility with all types of Siemens large-stroke valves produced since 1975.	Mounting sets are available for use with butterfly and slipper valves.

4.14.3 Manual adjuster

Automatic	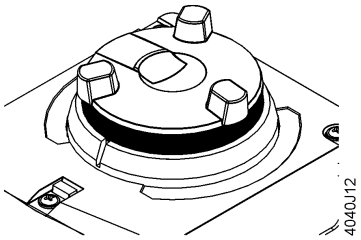	When the motor drives the manual adjuster turns. Thus in automatic mode, the manual adjuster is used for indication of travel. If the manual adjuster is held firm in this mode, there is no transmission of power to the gear train.
Manual operation	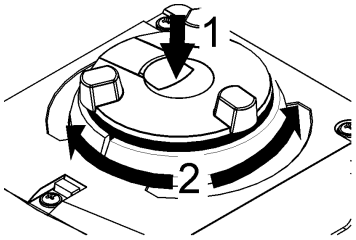	When pushing the manual adjuster down (1), it engages and the actuator can be manually operated. Stroke actuator: When turning the manual adjuster in clockwise / counterclockwise direction (2), the actuator's stem retracts / extends. Rotary actuator: The actuator spindle turns in the same direction. An overload protection prevents damage to the manual adjuster
Fixing the position	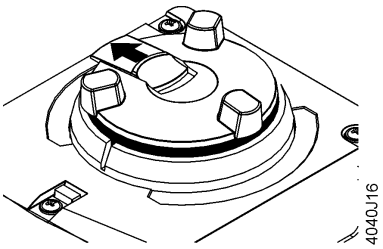	Upon actuation and locking the slide switch, the manual adjuster remains engaged. When in this mode, do not turn the manual adjuster.
Disengaging the fixing	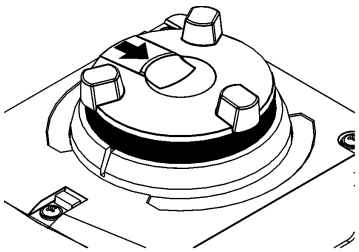	When resetting the slide switch, the manual adjuster returns to automatic mode. ->The modulating SA..61.. will automatically start a Zero Position Synchronization

4.14.4 Indicators

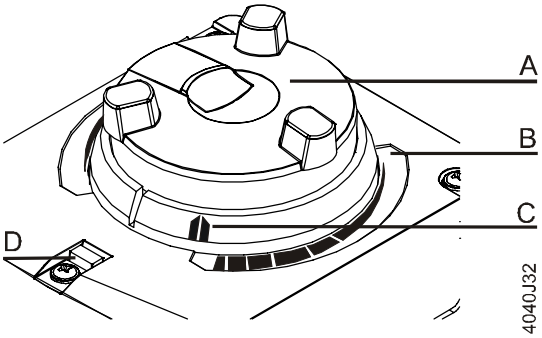

A	Indication of travel	
B	Scale	Position indication
C	Indicator	
D	LED Status indication	

Operational status indication

In Automatic mode, the manual adjuster serves for the indication of travel. See "Automatic" (page 69).

Position indication

Position indication is on 2 opposite sides. When turning the manual adjuster, the indicator moves in the same direction.

The scale indicates the stroke. When reaching the stops, the valve is either fully open or fully closed.

Status indication (LED)

Housing cover fitted	Housing cover removed
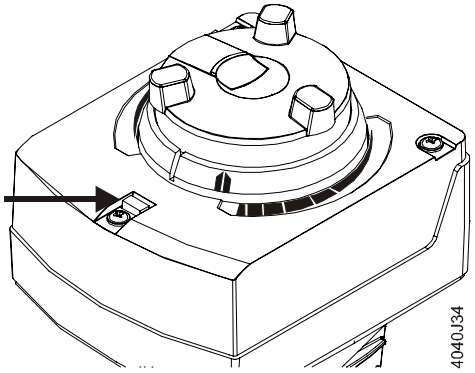	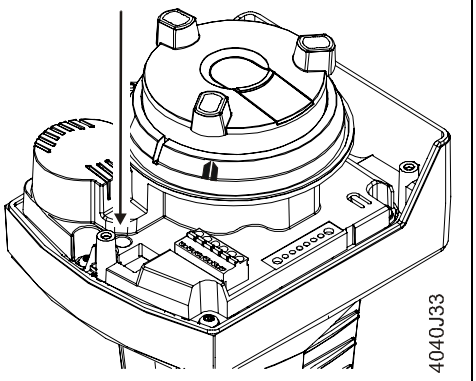
When the housing cover is fitted, the LED can be viewed through a light conductor.	When the housing cover is removed, the LED can be viewed through a hole.

The status indication informs about the operational state of the actuator.

LED	Indication	Operating state	Remarks, troubleshooting
Green	On	Automatic mode	Normal operation
	Blinking	Calibration (page 43).	Wait until calibration is finished (then green or red light)
		In manual mode	Manual adjuster in MAN position
		Detection of foreign bodies (page 61 / page 63).	Check valve / actuator
Red	On	Undervoltage	Check voltage
		Maximum stroke exceeded	Start calibration again (page 43). If error re-occurs immediately: actuator faulty.
	Blinking	Calibration error	Start calibration again. If error re-occurs immediately: check valve
		Clogged valve	
Dark	Dark	No power or electronics faulty	Check operating voltage

4.14.5 Electrical accessories

Auxiliary switch ASC10.51

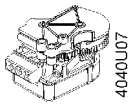

The auxiliary switch ASC10.51 switches on or off when a certain position is reached. The switching point can be set between 0…100%.

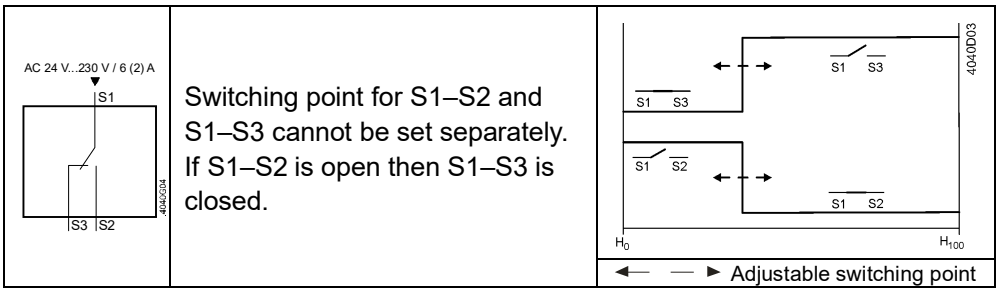

Application example: When using an auxiliary switch, position feedback can trigger an automatic stop of the circulating pump in the end position "Fully closed".

Potentiometer ASZ7.5/..

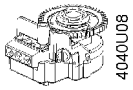

Potentiometer ASZ7.5 delivers an ohmic value to the controller giving the exact position of the actuator (continuous position feedback). A slip clutch prevents damage to the potentiometer in the mechanical end positions. This is also used for accurate balancing of the potentiometer in the fully closed position.

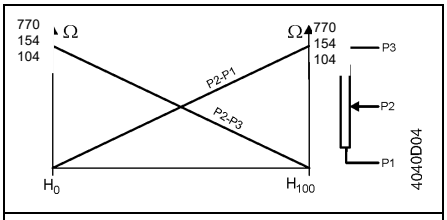

Ohmic value between P2-P1 increases with stroke H or rotation, ohmic value between P2-P3 decreases.

Flow characteristic: The end values of the potentiometers refer to the maximum stroke / maximum angular rotation of the actuators. For this reason, the resulting values in operation deviate, depending on the type of valve used in combination with the actuator. The potentiometer's starting point can be very accurately adjusted during installation (refer page 36).

	ASZ7.5
	770 Ohm at nominal stroke/nominal angular rotation
	R = 0 + 7.7 Ohm x nominal stroke/nominal angular rotation (%)
SAX..	R = 0 + 38.5 Ohm x stroke (mm)
SAV..	R = 0 + 19.3 Ohm x stroke (mm)
SAL..	R = 0 + 8.55 Ohm x rotary angle (°)

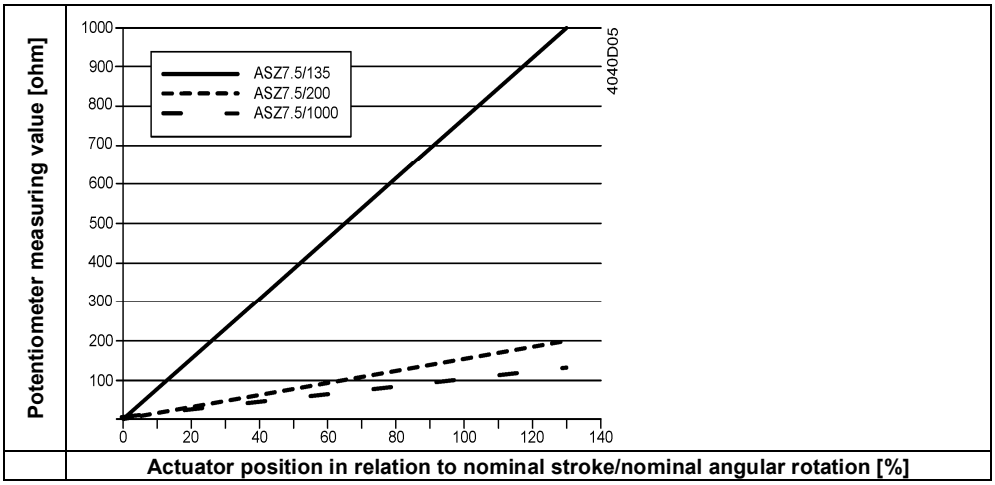

Function module AZX61.1

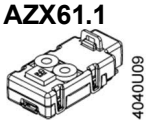

Function module AZX61.1 offers the following choices for changing control:

- Changeover of acting direction (page 55)
- Sequence control (page 54)

Stem heating element ASZ6.6

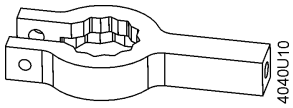

Stem heating element ASZ6.6 prevents the formation of ice on the stem when medium temperatures drop below 0 °C. It is suited for universal use with valves having a stem diameter of 10 or 14 mm.

The stem heating element heats up to 85 °C.

This is a PTC element, which means it shows up with a low resistance at power up – inrush current may reach 8.5 A at low temperatures / high voltage level

4.14.6 Mechanical accessories

Weather shield ASK39.1

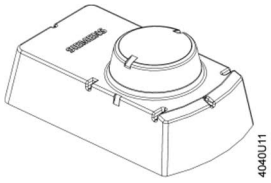

Weather shield ASK39.1 protects the actuator when installed outdoors. This does not lead to a change of IP class (IP54).
SA..61../MO are not suitable for outdoor applications

Mounting sets ASK3..N

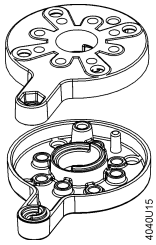

Mounting sets ASK31N, ASK32N, ASK33N and ASK35Nenable the actuators to be fitted to slipper valves VBF21.., DN65…150 and butterfly valves VKF41.. and VKF45 (page 27-34).

5 Technical data

			SAY..	SAX..	SAV..	SAL..
Power supply	Operating voltage					
	SA..31..		AC 230 V ± 15 %			
	SA..61..		AC 24 V ± 20 % / DC 24 V + 20 % / -15 % (SELV)			
	SA..81..		AC 24 V ± 20 % / DC 24 V + 20 % / -15 % (SELV)			
	Frequenz		45…65Hz			
	External supply line protection (EU)		• 6 A...10 A slow • Circuit breaker max. 13 A Characteristic B, C, D according to EN 60898 • Power source with current limitation of max. 10 A			
	Power consumption at 50 Hz					
	SAX31.00	Stem retracts / extends	-	3.5 VA / 2 W	-	-
	SAX31.03	Stem retracts / extends		6 VA / 3.5 W		
	SAX61.03..	Stem retracts / extends		8 VA / 3.75 W		
		Holding state		3.5 VA / 1.5 W		
	SAX61.03/MO	Stem retracts / extends		8,7 VA / 4,25 W		
	SAX81.00..	Stem retracts / extends		3.5 VA / 2.25 W		
	SAX81.03..	Stem retracts / extends		5 VA / 3.75 W		
	SAX31P03	Stem retracts / extends		6.5 VA / 4 W		
	SAX61P03	Stem retracts / extends		9.5 VA / 4.5 W		
	SAX61P03/MO	Stem retracts / extends		10.2 VA / 5 W		
	SAX81P03	Stem retracts / extends		7 VA / 4.5 W		
	SAV31.00..	Stem retracts / extends		-	6.5 VA / 4 W	-
	SAV61.00..	Stem retracts / extends			9.5 VA / 4.5 W	
	SAV61.00/MO	Stem retracts / extends			10,5 VA / 5 W	
	SAV61P00/MO	Stem retracts / extends			10,2 VA / 5 W	
	SAV81.00..	Stem retracts / extends			7 VA / 4.5 W	
	SAL31.00T10	Rotary actuator turns		-	-	3.5 VA / 2 W
	SAL31.00T20	Rotary actuator turns				4.5 VA / 2.75 W
	SAL31.00T40	Rotary actuator turns				7 VA / 4 W
	SAL31.03T10	Rotary actuator turns				5.5 VA / 3.25 W
	SAL61.00T10	Rotary actuator turns Holding state				5 VA / 2.5 W 3.5 VA / 1.5 W
	SAL61.00T20	Rotary actuator turns Holding state				6 VA / 2.75 W 3.5 VA / 1.5 W
	SAL61.00T40	Rotary actuator turns Holding state				9 VA / 4 W 3.5 VA / 1.5 W
	SAL61.03T10	Rotary actuator turns Holding state				7.5 VA / 3.5 W 3.5 VA / 1.5 W
	SAL81.00T10	Rotary actuator turns				3 VA / 2 W
	SAL81.00T20	Rotary actuator turns				4 VA / 2.75 W
	SAL81.00T40	Rotary actuator turns				6 VA / 3.75 W
	SAL81.03T10	Rotary actuator turns				5 VA / 3.5 W
	SAY31P03	Stem retracts / extends	6 VA / 3.5 W	-	-	-
	SAY61P03	Stem retracts / extends	8 VA / 3.75 W			
		Holding state	3.5 VA / 1.5 W			
	SAY61.03U	Stem retracts / extends	8 VA / 3.75 W			
		Holding state	3.5 VA / 1.5 W			
	SAY61P03/MO	Stem retracts / extends	8.7 VA / 4.25 W			
	SAY81P03	Stem retracts / extends	5 VA / 3.75 W			
	SAY81.03U	Stem retracts / extends	5 VA / 3.75 W			
	Switch-on current 3-position actuators (typical) [1]					
	SA..31..		2.3 A	2.3 A	2.3 A	2.3 A
	SA..81..		4.5 A	4.5 A	4.5 A	4.5 A

		SAY..	SAX..	SAV..	SAL..
Function data	Positioning times with specified nominal stroke / nominal angular rotation				
	SAX..00, SAV.., SAL..00		120 s	120 s	120 s
	SAY..03, SAX..03.., SAL..03	30 s	30 s	-	30 s
	Positioning force	200 N	800 N	1600 N	-
	Torque SAL..T10		-	-	10 Nm running
	SAL..T20 [2)]		-	-	20 Nm running
	SAL..T40 [2)]		-	-	40 Nm running
	Nominal stroke	15 mm	20 mm	40 mm	-
	Angular rotation		-	-	90°
Signal inputs	Positioning signal "Y" SA..31.., SA..81..	3- position			
	SA..31.. Voltage	AC 230 V ± 15 %			
	SA..81.. Voltage	AC 24 V ± 20 % / DC 24 V + 20 % / -15%			
	SA..61.. (DC 0...10 V)				
	Current draw	≤ 0,1 mA			
	Input impedance	≥ 100 kΩ			
	SA..61.. (DC 4...20 mA)				
	Current draw	DC 4…20 mA ± 1 %			
	Input impedance	≤ 500 Ω			
Communication	**Communications protocol**				
	Modbus RTU	RS-485, not galvanically separated			
	Number of nodes	Max. 32			
	Address range	1...248 / 255 Factory settings: 255			
	Transmission formats	1-8-E-1 / 1-8-O-1 / 1-8-N-1 / 1-8-N-2 Factory settings: 1-8-E-1			
	Baud rates (kBaud)	Auto / 9.6 / 19.2 / 38.4 / 57.6 / 76.8 / 115.2 Factory settings: Auto			
	Bus termination	120 Ω electronically switchable Factory settings: Off			
Parallel operation	SA..61..	≤ 10 (depending on controller output)			
Forced control	Positioning signal "Z"				
	SA..61..	R= 0…1000 Ω, G, G0			
	R = 0…1000 Ω	Stroke / rotation proportional to R			
	Z connected to G	Max. stroke 100% [3)]			90° [3)]
	Z connected to G0	Min. stroke 0% [3)]			0° [3)]
	Voltage	Max. AC 24 V ± 20 % Max. DC 24 V + 20 % / -15%			
	Current draw	≤ 0,1 mA			
Position feedback	Position feedback U				
	SA..61..	DC 0…10 V			
	Load impedance	>10 kΩ res.			
	Load	Max. 1 mA			
Connecting cable	Wire cross-sectional areas	0.13…1.5 mm², AWG 24…16 [4)]			
	Cable entries SA..	EU: 2 entries ∅ 20.5 mm (for M20) 1 entry ∅ 25.5 mm (for M25)			
	SA..U	US: 3 entries ∅ 21.5 mm for ½" tube connection			
	SA..61../MO	Fixed connecting cable: 0.9 m Number of wires: 5 x 0.75 mm²			
Degree of protection	Housing from vertical to horizontal	IP54 as per EN 60529 [5)]			
	Insulation class	As per EN 60730			
	Actuators SA..31.. AC 230 V	II			
	Actuators SA..61.. AC / DC 24 V	III			
	Actuators SA..81.. AC / DC 24 V	III			

		SAY..	SAX..	SAV..	SAL..
Environ-mental conditions	Operation Climatic conditions Mounting location	IEC 60721-3-3 Class 3K5 Indoors (weather-protected) [6]			
	Temperature General	-15…55 °C			
	Humidity (noncondensing)	5…95 % r.h.			
	Transport Climatic conditions Temperature Humidity	IEC 60721-3-2 Class 2K3 -25…70 °C <95 % r.h.			
	Storage	IEC 60721-3-1			
	Climatic conditions Temperature Humidity	Class 1K3 -15…55 °C 5…95 % r.h.			
	Max. media temperatur when mounted on valve	130 °C	130 °C	130 °C [7]	120 °C

		SAY..	SAX..	SAV..	SAL..
Directives and Standards	Product standard Electromagnetic compatibility (Application)	EN60730-x For residential, commercial and industrial environments			
	EU Conformity (CE)	A5W00000333 [8]	CE1T4501x1 [8]	CE1T4503xx [8]	CE1T4502X1 [8]
	RCM Conformity AC 230 V	A5W00000334 [8]	CE1T4515X4 [8]	CM1T4503_C1 [8]	-
	EAC Conformity	Eurasia conformity for all SA..-variants			
	UL, cUL AC 230 V AC/DC 24 V	- UL 873 http://ul.com/database; File number E35198			
Environ-mental compati-bility		The product environmental declarations contain data on environmentally compatible product designs and assessments (RoHS compliance, materials composition, packaging, environmental benefit, disposal):			
		7173310559Ben [7]	7173310559Ben [7] A6V101083254 [7]	7173310522A [7]	CE1E4502en [7]
Dimensions		See "Dimensions" (page 80)			
Weight	Excl. packaging	See "Dimensions" (page 80)			
Accessories	Potentiometer ASZ7.5 [9] Voltage Current rating	0…1000 Ω ± 5% DC 10 V (SELV) < 4 mA			
	Auxiliary switch ASC10.51 [9] Switching capacity External supply line protection US installation, UL & cUL	AC 24…230 V, 6 (2) A, floating See section power supply AC 24 V class 2, 5 A general purpose			
	Stem heating element ASZ6.6 Power supply Power consumption at 50 Hz Inrush current (cold)	AC / DC 24 V ± 20 % 50 VA / 30 W Max. 8.5 A (max. Temperatur 85 °C / 185 F)			
	Function module AZX61.1 for SA..61.. [9] Switching capacity External supply line protection US installation, UL & cUL	AC 24…230 V, 6 (2) A, floating See section power supply AC 24 V class 2, 5 A general purpose			

1) Switching time for RMS of the sine wave at nominal voltage
2) SAL.T20 / T40 have a minimum holding torque of 14 Nm
3) Observe acting direction of DIL switches
4) AWG = American wire gauge
5) Also with weather shield ASK39.1
6) SA..61../MO are not suitable for outdoor applications.
7) Up to 150 °C with horizontal mounting position
8) The documents can be downloaded from http://siemens.com/bt/download.
9) UL recognized component

6 Connection diagrams and dimensions

6.1 Internal diagrams

SA..31..

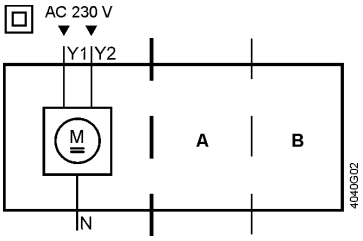

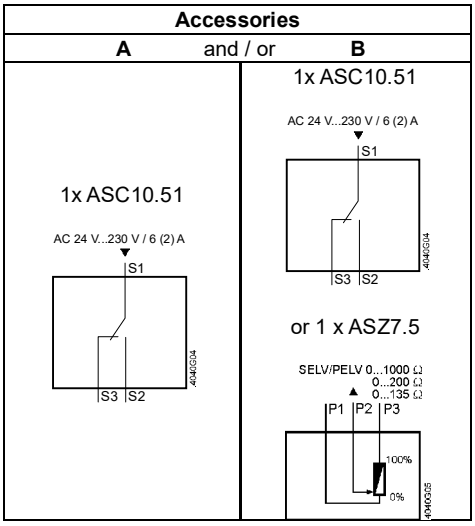

SA..61..

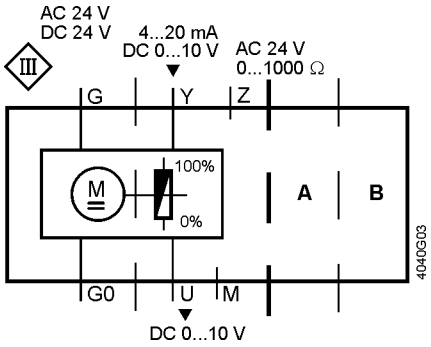

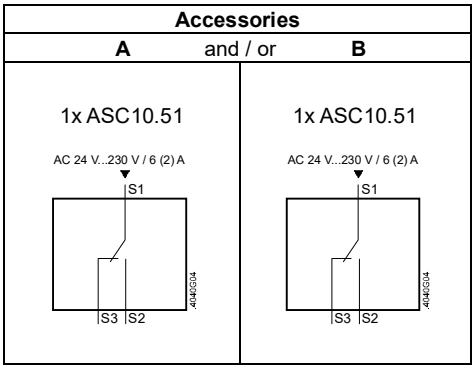

SA..61../MO

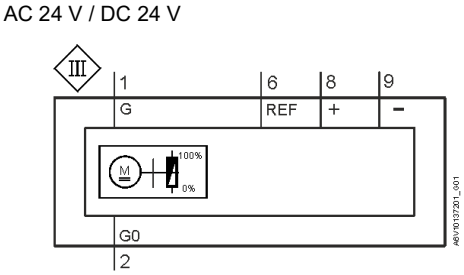

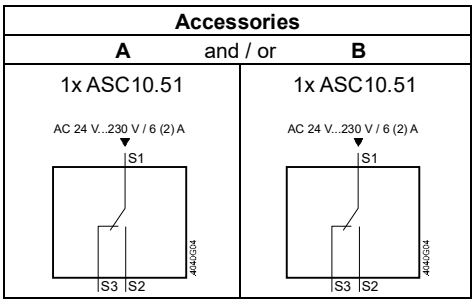

SA..81..

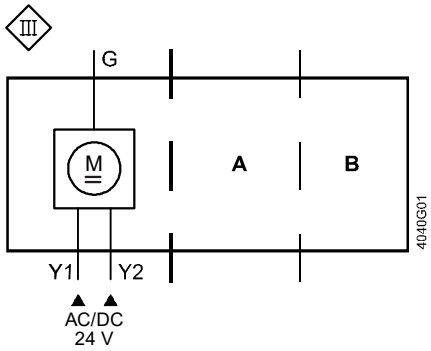

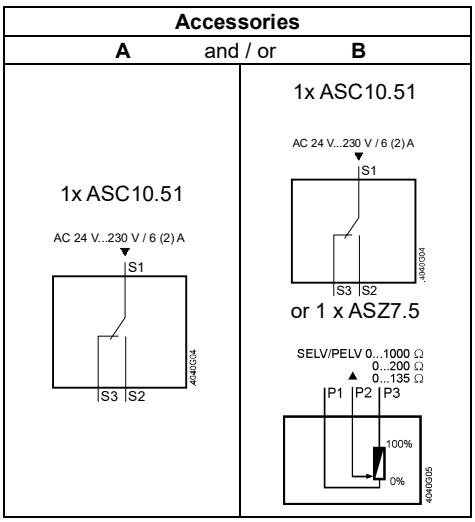

6.2 Connection terminals

6.2.1 Actuators

SA..31..

AC 230 V, 3-position

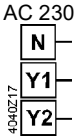

- N — System neutral (SN)
- Y1 — Positioning signal (actuator's stem extends / actuator's spindle turns clockwise)
- Y2 — Positioning signal (actuator's stem retracts / actuator's spindle turns counter-clockwise)

SA..61..

AC/DC 24 V, DC 0…10 V / 4…20 mA / 0…1000 Ω

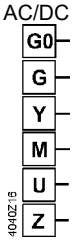

- G0 — Sytem neutral (SN)
- G — System potential (SP)
- Y — Positioning signal for DC 0…10 V / 4…20 mA
- M — Measuring neutral
- U — Position feedback DC 0...10 V - (reference potential is M measuring neutral)
- Z — Positioning signal forced control AC/DC ≤ 24 V, 0...1000 Ω

SA..61../MO
Fixed connecting cable
5 x 0.75 mm²

AC/DC 24 V, Modbus RTU connection cable

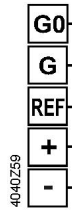

G0	System neutral (SN)	black
G	System potential (SP) AC 24 V ~ / DC 24 V ⎓	red
REF	Reference (Modbus RTU)	violet
+	Bus + (Modbus RTU)	grey
-	Bus - (Modbus RTU)	pink

SA..81..

AC/DC 24 V, 3-position

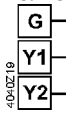

- G — System potential (SP)
- Y1 — Positioning signal (actuator's stem extends / actuator's spindle turns clockwise)
- Y2 — Positioning signal (actuator's stem retracts / actuator's spindle turns counter-clockwise)

6.2.2 Electrical accessories

Auxiliary switch ASC10.51

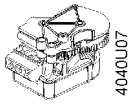

Adjustable switching points, AC 24…230 V

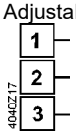

- 1 — System potential (SP)
- 2 — Closing Contact
- 3 — Opening Contact

Switching state allway's related to extending actuator stem or clockwise turning actuator's spindle turns

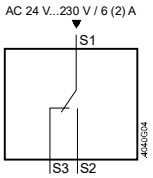

Potentiometer ASZ7.5

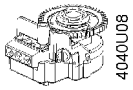

Adjustment of zero point, DC 10 V

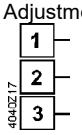

- 1 — Measuring neutral
- 2 — 0…x Ω
- 3 — x…0 Ω

x = 135 Ω, 200 Ω, 1000 Ω

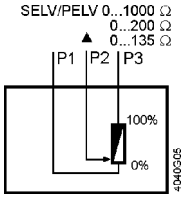

⚠ First, observe "Notes on ASZ7.5" (page 19).

Stem heating element ASZ6.6

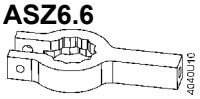

AC/DC 24 V / 30 W / 50 VA / inrush current max. 8.5 A

- 1 — System neutral (SN) (red)
- 2 — System potential (SP) (black)

6.3 Connection diagrams

SA..31..

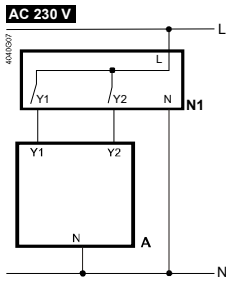

A	Actuator
L	Phase
N	Neutral
N1	Controller
Y1, Y2	Positioning signals

SA..61..

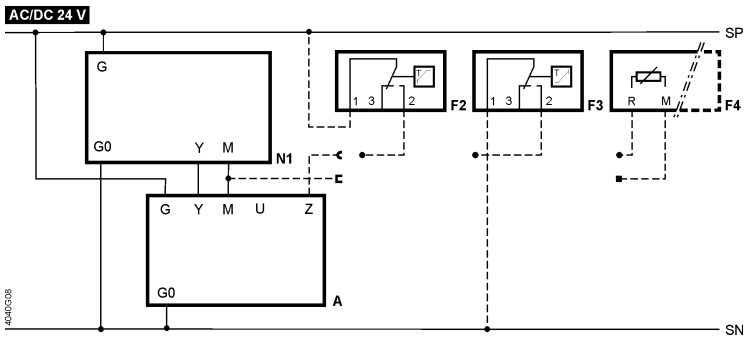

A	Actuator
F2	Frost protection thermostat; terminals: 1 – 2 frost hazard / sensor is interrupted (thermostat closes with frost) 1 – 3 normal operation
F3	Temperature detector
F4	Frost protection monitor with 0…1000 Ω signal output, does NOT support QAF21.. or QAF61..
M	Measuring neutral
N1	Controller
SN	System neutral
SP	System potential AC/DC 24 V
U	Position feedback– (signal common is M)
Y	Position signal
Z	Positioning signal forced control

SA..61../MO

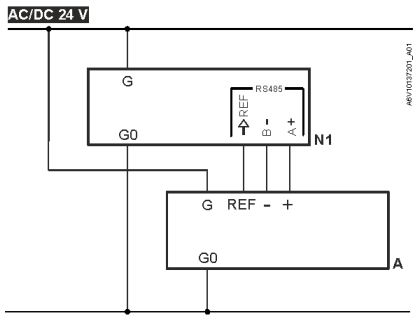

A	Actuator
G0	System neutral (SN)
G	System potential (SP)
N1	Controller
REF	Reference (Modbus RTU)
+	Bus + (Modbus RTU)
-	Bus - (Modbus RTU)

SA..81..

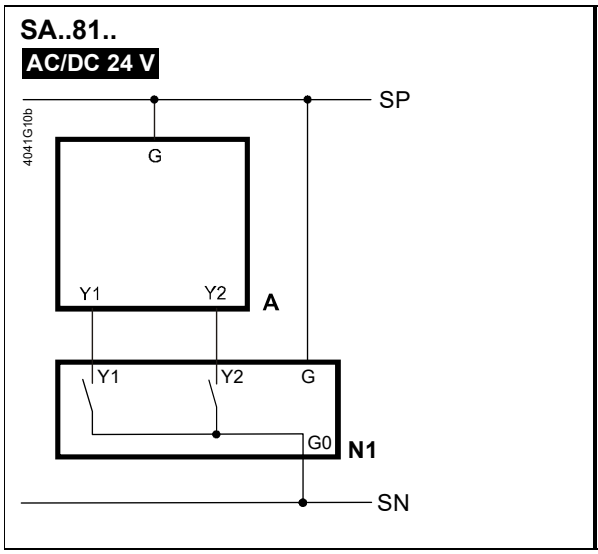

A	Actuator
N1	Controller
SN	System neutral
SP	System potential AC/DC 24 V
Y1, Y2	Positioning signals

6.4 Dimensions

6.4.1 Stroke actuators

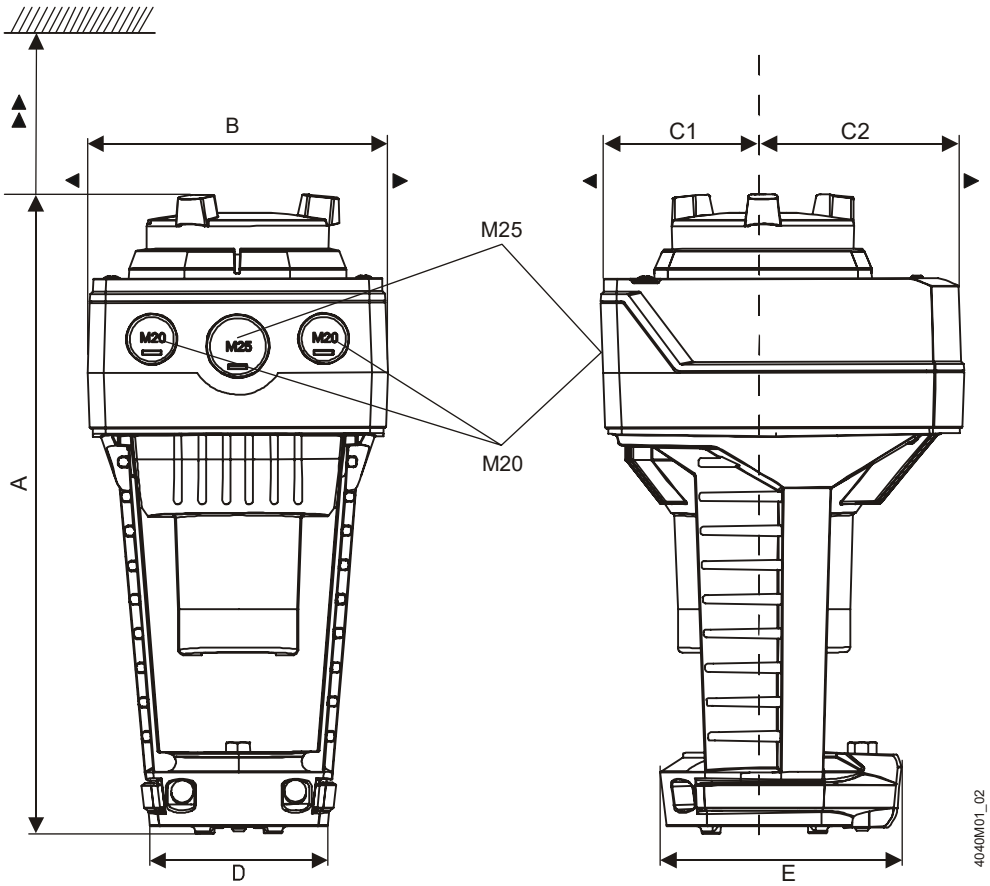

1 SAX../SAV..: M25
SAX..U/SAV..U: ½" (Ø 21.5 mm)
2 SAX../SAV..: M20
SAX..U/SAV..U: ½" (Ø 21.5 mm)

Type	A	B	C	C1	C2	D	E	►	►►	kg
SAX.. (U[1])	242	124	150	68	82	80	100	100	200	1.780
SAX../MO [3]										1.930
Mit ASK39.1	+25	154	300	200	100	-	-	-	-	2.010
SAV.. (U[1])	265	124	150	68	82	80	100	100	200	1.920
SAV../MO										2.070
Mit ASK39.1	+25	154	300	200	100	-	-	-	-	2.150
SAY.. (U[1])	242	124	150	68	82	80	100	100	200	1.780
SAY../MO										1.930

[1] SAX..U: 1.850 kg

[2] SAY..U: 1.850 kg

[3] Device equipped with a fixed connection cable – Left cable entry is used

Dimensions in mm

6.4.2 External Modbus converter

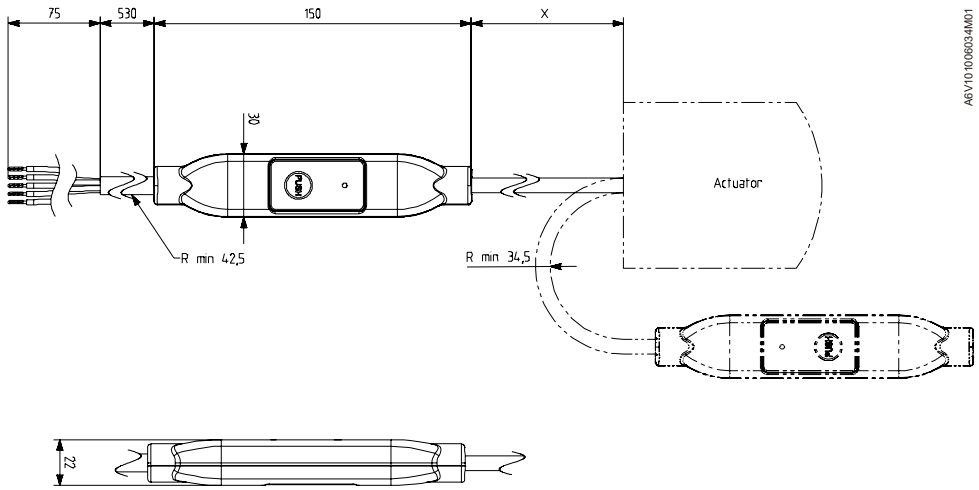

Type	X [mm]	kg [kg]
SA../MO	250	0.15 [1]

[1] Already included in total weight

Dimensions in mm

6.4.3 Rotary actuators

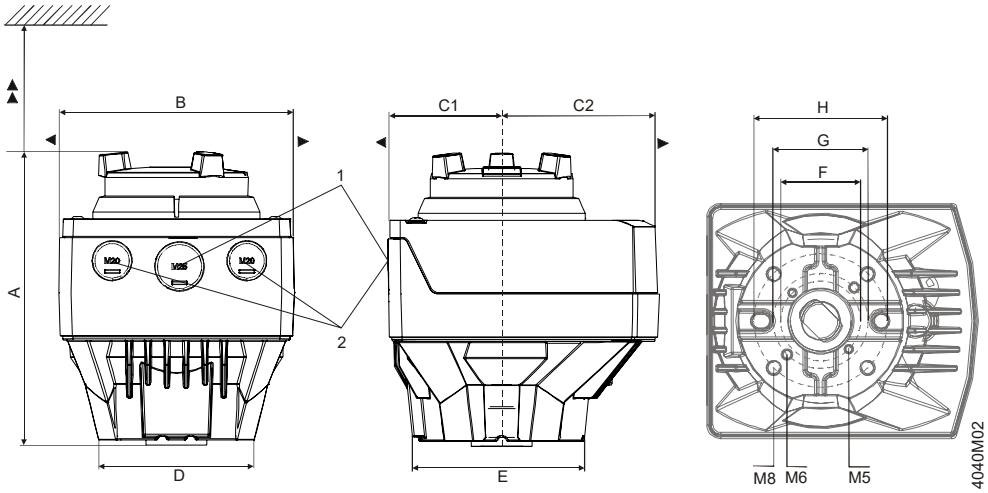

1 SAL..: M25
2 SAL..: M20

Typ	A	B	C	C1	C2	D	E	F	G	H	►	►►	kg		
													SAL..T10	SAL..T20	SAL..T40
SAL..	160	124	150	68	82	82	88	42	50	70	100	200	1.475	1.600	1.625
With ASK39.1	+25	154	300	200	100	-	-	-	-	-	-	-	1.710	1.835	1.860

With mounting set ASK3..N

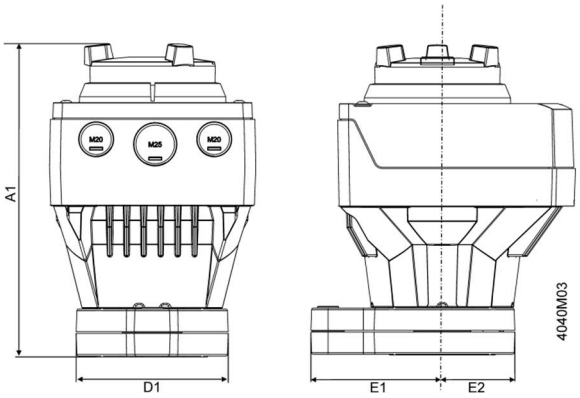

Type	A1	D1	E1	E2
SAL.. with ASK3..N	188	88	80	44
With ASK39.1	+25	-	-	-

Dimensions in mm

7 Revision numbers

Product no.	Valid from rev. no.	Product no.	Valid from rev. no.
SAX31.00	..H	**SAL31.00T10**	..E
SAX31.03	..H	**SAL31.00T20**	..D
SAX31P03	..H	**SAL31.00T40**	..B
SAX81.00	..H	**SAL31.03T10**	..E
SAX81.03	..H	**SAL61.00T10**	..E
SAX81.03U	..H	**SAL61.00T20**	..D
SAX81P03	..H	**SAL81.00T40**	..B
SAX61.03	..H	**SAL61.03T10**	..E
SAX61.03U	..H	**SAL81.00T10**	..E
SAX61P03	..H	**SAL81.00T20**	..D
SAX61.03/MO	..H	**SAL81.00T40**	..B
SAX61P03/MO	..A	**SAL81.03T10**	..E
SAV31.00	..B		
SAV61.00	..B	**SAY31P03**	..A
SAV61.00U	..B	**SAY61P03**	..A
SAV61P00	..B	**SAY81P03**	..A
SAV81.00	..B	**SAY61P03/MO**	..A
SAV81.00U	..B		
SAV81P00	..B		
SAV61.00/MO	..A		
SAV61P00/MO	..A		

8 Glossary

8.1 Symbols

	Caution, general danger – read the notes!
	Caution, hot surface – read the notes!
	Condition as supplied to costumer
	Crosstip screwdriver (Pozidriv)
	Slotted screwdriver
	Screw wrench
	Allen key

8.2 Terms

Climatix ™	The complete product range of flexible and scalable control solutions, standardized up to and including freely programmable solutions. Specialized for HVAC applications.
DIL switches	A DIL switch shows the switching choices in the form of a place value system (dual in line) in relation to basis 2 (on and off).
DN	Nominal size: Characteristic for matching parts of the piping system.
Forced control	Forced control serves for overriding automatic mode and is implemented in the structure.
HEX switches	A HEX switch shows the switching choices in the form of a place value system (hexadecimal system) in relation to basis 16 (0…9 and A…F).
kPa	Unit of pressure: 100 kPa = 1 bar = 10 mWS.
k_{vs}	Nominal flow rate: Nominal flow rate of cold water (5…30 °C) through the fully open valve (H_{100}) at a differential pressure of 100 kPa (1 bar).
LED	Light emitting diode.
Modbus RTU	Open communications protocol (client/server architecture), transmits data as binary data. RTU: Remote Terminal Unit.
PN	PN class: Characteristic relating to the combination of mechanical und dimensional properties of a component in the piping system.
Position feedback	Signal used to acquire the position, fed back via an input.
Spring return facility	Refer "fail safe function".
Δp_{max} / Δp_{maxV}	Maximum permissible differential pressure across the valve's control path, valid for the entire actuating range of the motorized valve (V = diverting mode).
Δp_s	Maximum permissible differential pressure at which the motorized valve will close securely against the pressure (close off pressure).
slotted screwdriver	

Index

3-position control 50
A/D conversion 50, 53
About this documentation..... 5
Accessories 19, 75
  Electrical accessories 19
  Mechanical accessories..... 20
Acting direction 55, 57
Angular rotation 11
Anschlussklemmen
  Stetig..... 77
Auxiliary switch ASC10.51..... 19, 35, 38, 42, 45, 47, 48, 71, 75, 76, 77
Before you start 7
Brushless DC motor..... 50, 53
Cable entries 74
Cable glands..... 9, 41
cable lengths 23
Calibration 43, 53, 59, **63**
Calibration slot 35, 53
Changeover of acting direction..... 55
Changeover of characteristic..... 53
Characteristics function..... 53
Commissioning 43
Connecting cable 74
Connection diagrams 76, 78
Connection terminals 35, 77
  3-position 77
  Actuators..... 77
  Auxiliary switch ASC10.51 77
  Electrical accessories 77
  Modulating..... 77
  Potentiometer ASZ7.5..... 77
  Stem heating element ASZ6.6 77
Contents 3
Control..... 50
Control functions..... 50
Control functoins..... 53
Control of direction..... 50
Copyright 7
Coupling 9, 69
Cross-sectional area of wire..... 24
cross-sectional areas 23
Degree of protection 74
Delivery 12
Detection of foreign bodies..... 53, 61, **63**
Detection of valve seat..... 60
Deviations..... 51
DIL switches 35, 53, 54, 55
Dimensions..... 75, 80, 81
  Rotary actuators 82
  Stroke actuators 80, 81
Direct acting..... 55, 57
Directives 75
Disposal 49
DN 14, 16, 18
Document use 8
Electrical accessories 71
Electrical planners 8
Engineering 9
Environmental compatibility 75
Environmental conditions..... 75
Equipment combinations 14
  2-port valves 16
  3-port valves 14
  combi valves 18
  slipper and butterfly valves 18
Extra functions 10, 11
Flow characteristic.....56, 57, 71
  Equal-percentage.....56, 57
  Linear 56, 57
Flow characteristic selection 56
Force..... 14
Forced control 10, 11, 53, 62, 74
Formulas for wire lengths 24
Function check 43
Function data 74
Function description **66**
Function module AZX61.1..... 19, 35, 37, 53, 54, 72
Function principle 68
Functions 50
Gear train 50, 53
Glossary..... 84
Handling..... 25
HEX switches 54
Housing cover 9
HVAC plants..... 8
Identification of seat.....50, 53
Indicators 70
  LED 70
  Operational status indication 70
  Position indication 70
  Status indication..... 70
Indoor use 25
Installation 9, 25, 41
Interior view..... 35
Internal diagrams..... 76
Kennlinienumschaltung..... 10
k_{vs} 14, 16, 18
L/P-diagram..... 24
LED.....10, 11, 35, 53, 70
Maintenance.....**46**, 49
Manual adjuster.....9, 10, 11, 50, 53, 69
  Automatic..... 69
  Disengaging the fixing 69
  Fixing the coupling 69
  Manual operation 69

Manual adjustment 50, 53, **64**
Mechanical accessories 72
Modbus RTU 46
Modulating control 53
Montagesatz ASK3..N 18
Montagesatz ASK31N 20, 29
Montagesatz ASK33N 20
Montagesatz ASK35N 20
Motor control 50, 53
Mounting 25
  Accessories 35
  Auxiliary switch ASC10.51 38
  Fitting actuators to butterfly valves 27, 32, 33
  Fitting actuators to seat valves 25
  Fitting actuators to slipper valves 29
  Function module AZX61.1 37
  Mounting positions 25
  Potentiometer ASZ7.5 36
  Stem heating element ASZ6.6 40
  Weather shield ASK39.1 41
Mounting set ASK3..N 72, 82
Mounting set ASK33N 27
Mounting set ASK35N 33
Navigation 5
Operating voltage 24, 73
Opertaing voltage 10, 11
Ordering 12
Outdoor use 25
Parallel operation 74
Parallel operation of actuators 23
Parameters **64**
Permissible voltage drop 24
Permissible wire length 24
Plug-in space A 35, 36, 38
Plug-in space B 35, 37, 39
PN 14, 16, 18
Position control 53
Position feedback 10, 11, 56, 74
Position indication 9
Positioning force 10, 11, 14, 16, 20
Positioning signal 10, 11, 53
Positioning signal (Z) 74
Positioning signal selection 56
Positioning time 10, 11, 20
Positioning times stroke model 51
Potentiometer ASZ7.5 ..... 19, 35, 36, 45, 71
Potentiometer ASZ7.5.. .....42, 75, 76, 77
Power consumption 24
Power supply 53, 73
Power transmission 9
Product description 9
Product replacements
  Electrical accessories 21
  Rotary actuators SQL.. to SAL.. 21
  Stroke actuators SQX.. to SAX.. 20
Product replacements 20
Quality assurance 8
Quick access 5
Reference documents 7
Request to the reader 8
Reverse acting 55, 57
Revision history 6
Revision numbers 83
Scope of this document 8
Selecting the acting direction 55
Sequence control 54
Setting elements 35
Signal adaptation 54
Signal error 23
Signal inputs 74
Signal priorities 60
Sizing 23
Spare parts 22
Spring return time 10, 11
Standards 75
Status indication 9
Stem heating element ASZ6.6 ..... 19, 40, 72, 75, 77
Stroke 10, 11
Supported function codes 66
Symbols 84
Technical 68
Technical data 73
Technical design **62**
Technology **62**
Terms 84
Torque 11, 18, 21
Trademarks 7
Transmission of power 68
Type summary 10
  Rotary actuators 11
  Stroke actuators 10
Use 10
User interface 9
Valve neck coupling 9
Valve seat detection **62**
Valve stem coupling 9
Voltage drop 23
Volumetric flow 55, 56
Warranty 24
Weather shield ASK39.1 .....41, 72
Weight 75
Wetterschutzhaube ASK39.1 20
Wiring 41
  Actuator 42
  Auxiliary switch ASC10.51 .....42, 45
  Potentiometer ASZ7.5.. 42
  Preparation of wire endings 41
Yoke 9
Δp_{max} 14, 16, 18
Δp_s 16, 18

Issued by
Siemens Switzerland Ltd
Smart Infrastructure
Global Headquarters
Theilerstrasse 1a
6300 Zug
Switzerland
Tel. +41 58-724 24 24
www.siemens.com/sbt

© Siemens Switzerland Ltd, 2010
Technical specifications and availability subject to change without notice

Gtksnab
Оборудование для жизни

Мы ценим каждого клиента и предлагаем широкий ассортимент продукции. Оборудование соответствует всем директивам безопасности и имеет необходимые лицензии. Быстрая доставка по всей России и СНГ. Самовывоз со склада в Москве. Квалифицированные специалисты всегда готовы проконсультировать и помочь подобрать нужные запчасти. Доверьтесь нашему многолетнему опыту и надежности поставок! Интернет-магазин "Gtksnab".

Остались вопросы?
Нужно подобрать или заказать деталь?

Email
order@gtksnab.ru

Телефон
+7 (495)131-57-49

Whatsapp
+7(985) 991-80-53

Telegram
@gtksnab

Сайт
gtksnab.ru